INSTRUCTIONS

GEK-24971 D

ValuTrol* DRIVE

MOTOR FIELD CONTROL CARD

GENERAL DESCRIPTION — ADJUSTMENTS

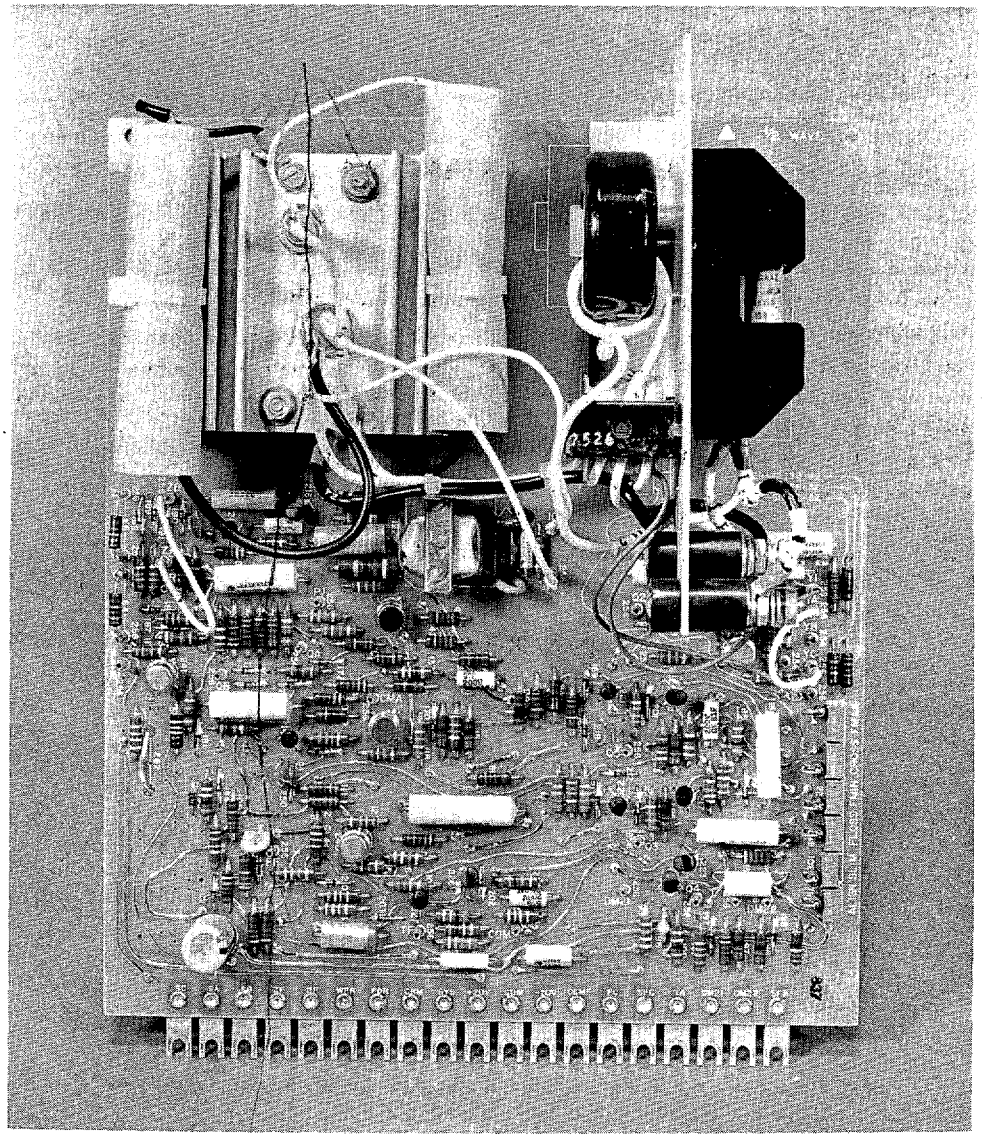

(Photo MG-5236-E)

These instructions do not purport to cover all details or variations in equipment nor to provide for every possible contingency to be met in *connection with* installation, *operation or maintenance. Should further information be desired or should particular problems arise which are not covered sufficiently for the purchaser's purposes, the matter should be referred to General Electric Company.*

GENERAL@ ELECTRIC

***TRADEMARK OF GENERAL ELECTRIC COMPANY, U.S.A.**

TABLE OF CONTENTS

	Page
Introduction	3
General Description	3
Input and Output Points	3
Adjustments	4
Computing Adjustment Points	6

LIST OF ILLUSTRATIONS

Figure		Page
1	Relationships between CEMF, Tachometer volts, motor speed CROSS and ALIGN adjustments	7
2	Motor Field Control Block Diagram	9
3	Elementary Diagram — 1/2 Wave (36C764158AD Sheets 1 & 2)	10, 11
4	Printed Circuit Card Diagram — 1/2 Wave (36D868802AD)	12
5	Elementary Diagram — 2/3 Wave (36C764159AD Sheets 1 & 2)	13, 14
6	Printed Circuit Card Diagram — 2/3 Wave (36D868803AD)	15
7	Elementary Diagram — 2/3 Wave (36C764159AC shs 1 & 2)	16, 17
8	Printed Circuit Card Diagram — 2/3 Wave (36D868803AC)	18

LIST OF TABLES

Table		Page
I	FC Voltage Constant (Volts/Amp)	6
II	Motor Field Ranges for 193X532AC	6

WARNING

ALWAYS DISCONNECT ALL POWER TO THE DRIVE BEFORE REMOVING OR INSERTING A PRINTED CIRCUIT CARD. FAILURE TO DO SO MAY CAUSE SERIOUS INJURY TO PERSONNEL AND DAMAGE TO THE DRIVE OR DRIVEN MACHINERY.

INTRODUCTION

The motor field control card (MFC) is an SCR controlled power supply intended for use as an adjustable voltage exciter for highly inductive loads. It is used primarily as a motor field supply for use with drive systems that require operation in the constant horsepower region where the armature voltage is maintained constant and the motor field is varied. The crossover circuitry that achieves this type of control is an integral part of this card.

GENERAL DESCRIPTION

The basic elements of the motor field control card (MFC) are shown in the simplified block diagram, Fig. 2. Two technologies can be provided for the DC SCR power rectifier:

1. A half-wave unit for:

   120V DC from a 266VAC single-phase source

2. A two-thirds wave unit for:

   150V DC from a 230VAC three-phase source or,
   300V DC from a 460VAC three-phase source

The control circuitry includes a current regulator designed to reduce the effects of motor field heating. Several ranges of motor field current can be selected by arranging the jumpers YA, YB, YC, YD and RFR, as shown in Table II. Vernier adjustment of maximum motor field current can be achieved with potentiometer ***FMAX***.

The motor field output terminals are F1 and F2 located just below the fuse block with F1 being positive. The designations F1 and F2 are clearly labeled for easy identification.

The circuits are designed for 50 hertz or 60 hertz operation. If the input frequency is 60 hertz, there should be a jumper between ZA and ZB. This jumper should be removed for 50 hertz operation.

Burst firing techniques provide protection against AC line disturbances and random electrical noise. A selection of jumpers at QA, QB, PR and PJ provide adjustments for the response and stability of the field current regulator and the motor control loop when in the constant horsepower range.

Armature voltage can reduce field current only to a minimum value that is established by potentiometer ***FMIN***. ***FMIN*** should be set after ***FMAX*** since the ***FMAX*** setting affects ***FMIN*** but not visa versa.

The crossover adjustment (CROSS) establishes the point at which motor armature voltage or CEMF causes maximum field current to begin to decrease, thus, permitting increased motor speed with limited increase in CEMF. By adding a jumper from CRS to COM, crossover will occur at 0 armature volts with CROSS pot fully CCW.

The scaled SFB (Speed Feedback) signal proportional to tachometer voltage is compared to the motor CEMF signal. ***ALIGN*** adjustment scales the speed feedback signal to track the CEMF signal below crossover. Normal operation above crossover results in the SFB signal being higher than the CEMF signal and circuitry is provided to prevent trips in this mode. See Figure 1. If the CEMF signal is greater than SFB signal or of the same polarity (indicating a reversed tachometer connection) a trip will be initiated.

The speed limit (SLIM) adjustment sets a limit on motor speed where operation is not desired. ***SLIM*** and ***ALIGN*** are tied in with the "tachometer monitor" function'which is designed to reduce the possibilities of motor overspeed in the event of tachometer circuitry problems, (loss of feedback signal or reversed polarity) and control misoperation.

Finally, a motor field loss circuit (***FLOSS***) is provided. All of these malfunctions, field loss, tachometer problems and overspeed are connected to a common system loss trip circuit (SYS) which is usually used to provide an orderly shutdown of the drive system.

NOTE

A JUMPER FROM LPD-LPI MUST BE IN PLACE TO ELIMINATE TRIPS CAUSED BY AN OUT-OF-RANGE CONDITION ON 2/3 WAVE MOTOR FIELD CARDS.

INPUT AND OUTPUT POINTS

There are nineteen (19) terminal board points along the lower edge of the printed circuit card and four (4) or five (5) terminals for power near the top of the card with the 1/2 wave version having (4) and the 2/3 wave version having (5) connections.

The AC power input terminals are at the top of the fuse block. For a 1/2 wave unit, the proper connection from left to right are L1 and XO. For a 2/3 wave unit, the connections are L1, L2 and L3. Since synchronizing signals are from an external source, it is essential that the input connections are made as stated and that the phase sequence is 1-2-3.

The DC output terminals are below the fuse block and are F1, F2 left to right with F1 being positive.

The control terminals are as follows:

1. SC Synchronizing signal

2. SA Synchronizing signal

3. SE Synchronizing signal

4. ZF "Zero Field" — connecting to common prevents the SCR from being fired.

5. RF "Reduce Field" — connecting this point to +20V will reduce the output to a minimum voltage.

6. WFR "Weak Field Reference" an input for controlling the field or an output indicating that the field is being weakened by the action of the crossover control. A positive voltage of 8.7 volts DC will reduce the field to the current value determined by the minimum output voltage and the field resistance. Normally used to establish field economy while not running and to signal weak field operation and modify speed regulator stability while running.

7. FDR "Field Diagnostic Reference" an input for adjusting the motor field control. A negative voltage will cause the field to go into crossover and is used for setting minimum field, FMIN. It also may be used to approximately set CROSS (Crossover). A negative voltage 0.55 volts greater than the CEMF signal at crossover should be used. Applying positive voltage to FDR will weaken the field. The minimum mode is normally used to set field loss, FLOSS.

8. CRM "Crossover Modify" may be used to modify the crossover point. Applying a positive voltage to CRM will increase the CEMF level required for crossover by .48 volts/volt.

9. SYS This is the trip output and signals overspeed, tach loss or polarity, field loss or out of range. The out-of-range feature is only included in 2/3 wave versions. +10V to +17V (indicates a fault).

10. +20V Input terminal for the positive power supply to the control circuitry of the MFC.

11. COM The common terminal of the control circuitry.

12. -20v Input terminal for the negative power supply to the control circuitry.

13. CEMF Input signal which initiates crossover. Normally this will be a signal proportional to the counter EMF of a motor. It also is used in the tachometer monitor section.

14. FC An output whose average value is proportional to the average value of the field current. Proportionality constant is a function of current scaling jumper connections.

15. SFC An output whose average value is proportional to the average value of the field currents. The magnitude is scaled to 4.06 volts at full field as determined by the FMAX potentiometer. This output should not be loaded by less than 100K.

16. TA "Tach Align" is an output used in adjusting the tachometer monitor portion of the circuit.

17. DM21 This terminal is connected to a contact pin also labeled DM21 which may be connected to internal contact pins with a jumper wire.

18. DM22 Same as above except connected to contact pin DM22.

19. SFB This is an input point to the tachometer monitor portion of the circuit. The "Speed Feedback" should be proportional to the speed of the motor. (Normally 10V at top speed).

ADJUSTMENTS

The following description outlines adjustments procedures for a system with constant horsepower range. Some drive systems include a motor field control card (MFC) for:

'1. Field current regulation
2. Motor field economy
3. Tachometer monitor
4. Motor field reversing
5. Special motor field voltages

or other functions when constant horsepower is not provided. For such systems, adjust **CROSS** full clockwise (5 o'clock). All other adjustments such as **FMAX, FMIN, FLOSS, ALIGN,** and **SLIM** should be adjusted as if it *were* a constant horsepower drive, The settings described in this manual are representative only and should be used only when Test Data Sheet values are not available.

It is assumed that the motor field control is properly installed with plus and minus power supplied as well as synchronizing signals. Since the synchronizing signals are externally derived, the AC power must have the proper phase relationship with the synchronizing signals.

Check that a jumper is connected between ZA and ZB if 60 Hz power is being used. The jumper is omitted for 50 Hz operation.

Install or check the current scaling jumpers using Table II as a guide.

Set the desired maximum field current with **FMAX** potentiometer. When making this adjustment, there must be no voltage applied at FDR or WFR. Current may be monitored with an ammeter or if a precise setting is not required, the current may be read by measuring the voltage at FC and applying the proper proportionality constant from Table I.

Adjust' the minimum field setting with the **FMIN** potentiometer. This must he set after setting the maximum field. Apply a negative voltage to FDR to initiate crossover. Apply only enough voltage to weaken the field. Applying too much voltage will force the clamp and result in an incorrect **FMIN** setting. The proper value for **FMIN** may be determined from the motor nameplate. A suitable value is 70% of the field required at top speed. Setting too high a value may prevent the motor from achieving top speed. Monitoring field current with an ammeter or FC voltage, adjust the **FMIN** potentiometer to desired value.

Next, adjust **FLOSS** the (field loss) trip level. A suitable value is 50% of the field current level at top speed. Turn the **FLOSS** potentiometer fully CCW and reduce the field with a positive voltage applied at FDR. A positive voltage will reduce the current below the level determined by FM/N. With the field held at the desired level as determined by an ammeter or FC voltage, turn the **FLOSS** potentiometer clockwise very slowly until a trip occurs. The trip may be monitored by measuring the voltage at SYS or observing the "Ready to Run" light. When using the diagnostic card, it is a good idea to have **ALIGN** turned fully CW so that trips will not be caused by the tachometer monitor functions.

The overspeed limit may be set statically. A signal is applied to SFB at a desired value above the maximum normal value and **SLIM** is adjusted to cause a trip. Since the drive is normally scaled to have SFB equal to 10.0 volts at top speed, a value 15% higher or 11.5 volts is appropriate. When using the diagnostic card, a signal is also applied to FDR which can cause a field loss trip if FDR is positive. Turn the local reference pot (**LOC REF**) in the (-LR) direction so that FDR will be negative and the field will be reduced to the value determined by the **FMIN** setting.

The tachometer monitor function must be aligned while running the drive below base speed. With the **ALIGN** potentiometer fully CW, the TA point will be found to have a voltage of about 16 volts with polarity a function of direction of rotation. **ALIGN** should be turned CCW until TA voltage falls between f0.2 volts. Care must be taken that the drive is truly below base speed; however, for accuracy, should be operating at a voltage at least 80% of crossover.

Crossover (**CROSS**) is adjusted best while running but may be set approximately statically. To set statically, calculate the value of CEMF **at** the desired level. This will be approximately 5 volts for most drives. Add 0.55 volts to this value of CEMF and apply to FDR. The additional 0.55 volts is an allowance for a diode drop in the FDR circuit. The voltages should be negative with respect to common. Turn the CROSS potentiometer fully CW and then turn it slowly CCW until the field starts to weaken. The field weakening may be monitored with an ammeter or by measuring the voltage on FC. During this adjustment, there must be no signal applied to CEMF or CRM. For setting while running, normally, start with **CROSS** fully CCW and call for a speed sufficiently high enough to require field weakening. Turn *CROSS* clockwise until the operating voltage reaches the desired level. Make sure that the speed called for is sufficiently high for the drive to be **above** crossover at the new voltage.

Stabilizing circuits for the field current regulator and the system are provided and normally require no modification or adjustment. However, for low time constant fields it may be necessary to modify the gain of the current regulator. Contact pins QA and QB may be connected. If further adjustment is required, the output and summing junction of the OP AMP in the current regulator are available at contact pins PR and PJ respectively.

TABLE I
FC Voltage Constant (Volts/Amp)

JUMPERS	GO1, GO4	G02, G06
NONE	10.0	4.79
YB-YD	6.6	3.14
YA-YB	3.39	1.65
YA-YB & YC-YD	2.19	.99
YA-YC	1.20	.66
YA-YC & YB-YD	.69	.35
RFR — COM	23.4	----
RFR-COM, YB-YD	15.8	----

TABLE II
Motor Field Ranges In amperes for MFC 193X532 by Jumper and FMAX Adjustment

	Half-Wave		Two-Thirds		
Jumpers	ADGO-1	ADGO-2	ADGO-4	ACGO-6	BAGO-6
None	0.45-0.90	0.94-1.88	0.45-0.94	0.94-1.88	0.941.88
YB-YD	0.63-1.36	1.43-2.87	0.69-1.36	1.43-2.87	1.43-2.87
YA-YB	1.33-2.65	2.73-5.45	1.33-2.65	2.73-5.45	2.73-5.45
YA-YB & YC-YD	2.05-4.11	4.55-9.09	2.05-4.11	4.55-9.09	4.55-9.09
YA-YC	3.75-7.5	6.02-13.6	3.75-7.5	6.82-13.6	6.82-13.6†
YA-YC & YB-YD	6.52-13.0*	12.9-25.7*	6.52-13.0*	12.9-25.7*	12.9-25.7†
RFR-COM, YB-YD	.28-.56	---	.28-.56	---	---
RFR-COM	.19-.38	---	.19-.38	---	---

*Derate 30% unless force ventilated

†Limit output current to 10 amps max convection cooled or 19 amps max force ventilated.

COMPUTING ADJUSTMENT POINTS

In the event Test Data Sheet values are incorrect for the particular motor used in conjunction with this motor field control card, proceed as follows to establish new Test Data Sheet values:

1. Determine motor shunt field current requirements for base/top speed. (See Motor Nameplate or Contact Vendor)..

   Note: Do not attempt to run a motor above base speed without a feedback tachometer.

2. Determine and install motor field range jumpers per Table II on page 6.

3. Remove jumper ZA to ZB on the Motor Field Card if this IS a 50 Hertz drive.

4. Determine FC Voltage Constant from Table I on page 6.

5. Multiply FC Voltage Constant times base speed field current to determine base speed FC voltage.

6. Multiply FC Voltage Constant times top speed field current times 0.7 to determine MIN FIELD FC Voltage. (Only applies to motors which are to be run above base speed.)

7. Multiply FC voltage constant times top speed field current times 0.5 to determine FLOSS FC voltage.

8. Preset FMAX, SLIM, and ALIGN potentiometers fully clockwise (CW). Preset FMIN CROSS and, FLOSS potentiometers fully counter clockwise (CCW).

WARNING

THIS ADJUSTMENT OF FLOSS PREVENTS PROPER OPERATION OF THE FIELD LOSS MONITORING CIRCUIT AND COULD ALLOW MOTOR OVERSPEED AND CONSEQUENT FAILURE IF ATTEMPTS TO RUN THE MOTOR ARE MADE AT THIS TIME.

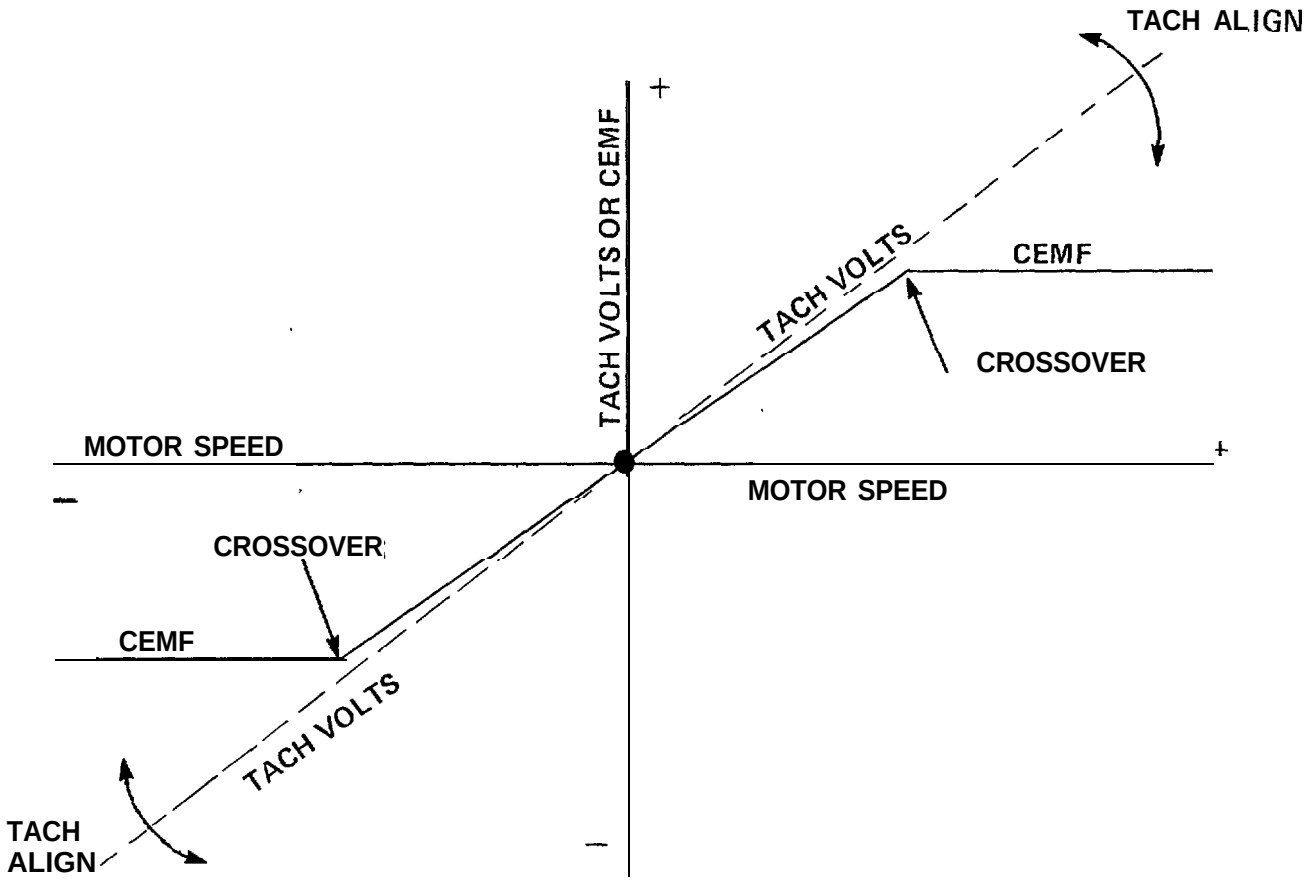

FIGURE 1
Relatlonships between CEMF, tachometer volts, motor speed CROSS and ALIGN adjustments

NOTE

IF A DIAGNOSTIC CARD IS NOT AVAILABLE, REFER TO THE DRIVE SYSTEM INSTRUCTION BOOK FOR TEST CIRCUIT TO BE USED.

8. FMAX adjustment:

   a. Select Diagnostic Static mode.

   b. Verify output of LOC REF and CUR REF on Diagnostic are zero.

   c. Adjust LOC REF for -1 volt at Main Control Card (MCC) test point LR.

   d. Adjust FMAX to obtain the FC value calculated in step 5, on page 6.

9. FMIN adjustment:

   a. Select Diagnostic Static mode.

   b. Adjust LOC REF for approximately -6 volts (FWD) at LR on MCC.

   c. Adjust FMIN to obtain the FC value calculated in step 6, on page 6.

10. FLOSS adjustment:

   a. Select Diagnostic Static mode.

   b. Adjust LOC REF (REV) to obtain FC value determined in step 7, on page 6.

   c. Slowly adjust FLOSS pot clockwise (CW) until the drive Ready to Run (RTR) light goes out

   d. Return LOC REF pot to zero.

   e. Push RESET pushbutton to reset drive.

11. SLIM adjustment:

a. Select Diagnostic **Static mode.**

b. Adjust LOC REF pot to obtain 11.5 volts on SFB test pin on MCC.

c. Slowly adjust SLIM pot counter clockwise (CCW) until the drive Ready to Run (KTR) light goes out.

d Return LOC REF pot to zero.

e. Push RESET pushbutton to reset drive.

12. ALIGN **adjustment:**

a. With LOC REF at 0, select Diagnostic Kun mode.

CAUTION

MOTOR WILL RUN IN **THIS** MODE.

b. Adjust LOC REF pot to obtain approximately 80% base speed rpm of the motor.

c Adjust ALIGN pot to obtain 0 volts, (±0.2) at test point TA on the Main Control Card (MCC).

13. CROSS adjustment:

Note: Turn CROSS potentiometer fully clockwise (CW) **if motor speed above** base **is** not required speed.

a. Select Diagnostic Static mode.

b. Adjust LOC **KEF** pot for -5.6 volt at **LR** test point on MCC.

c. Monitor FC voltage.

d. Slowly adjust the CROSS pot clockwise (CW) until the FC voltage just begins to decrease.

e. Return LOC KEF pot to zero.

Nor mal running operation should now be checked. An adjustment of MAX SPEED, per the drive system I nst I uction book should not be made,

TEST DATA SHEET VALUES ±57%

MAX FIELD: _____ Amps, FC = _____ Volts (DIAG STATIC)
MIN FIELD: _____ Amps, FC = _____ Volts (DIAG STATIC)
FIELD **LOSS:** _____ Amps, FC = _____ Volts (DIAG STATIC)
OVERSPEED: _____ %, **SFB** = _____ Volts (DIAG STATIC)
ALIGNMENT: At 90% Base Speed, TA = 0 Volts (±0.2) (DIAG RUN)
CROSSOVER: CEMF = — _____ Volts (Normal) or LR = — _____ Volts (DIAG STATIC)

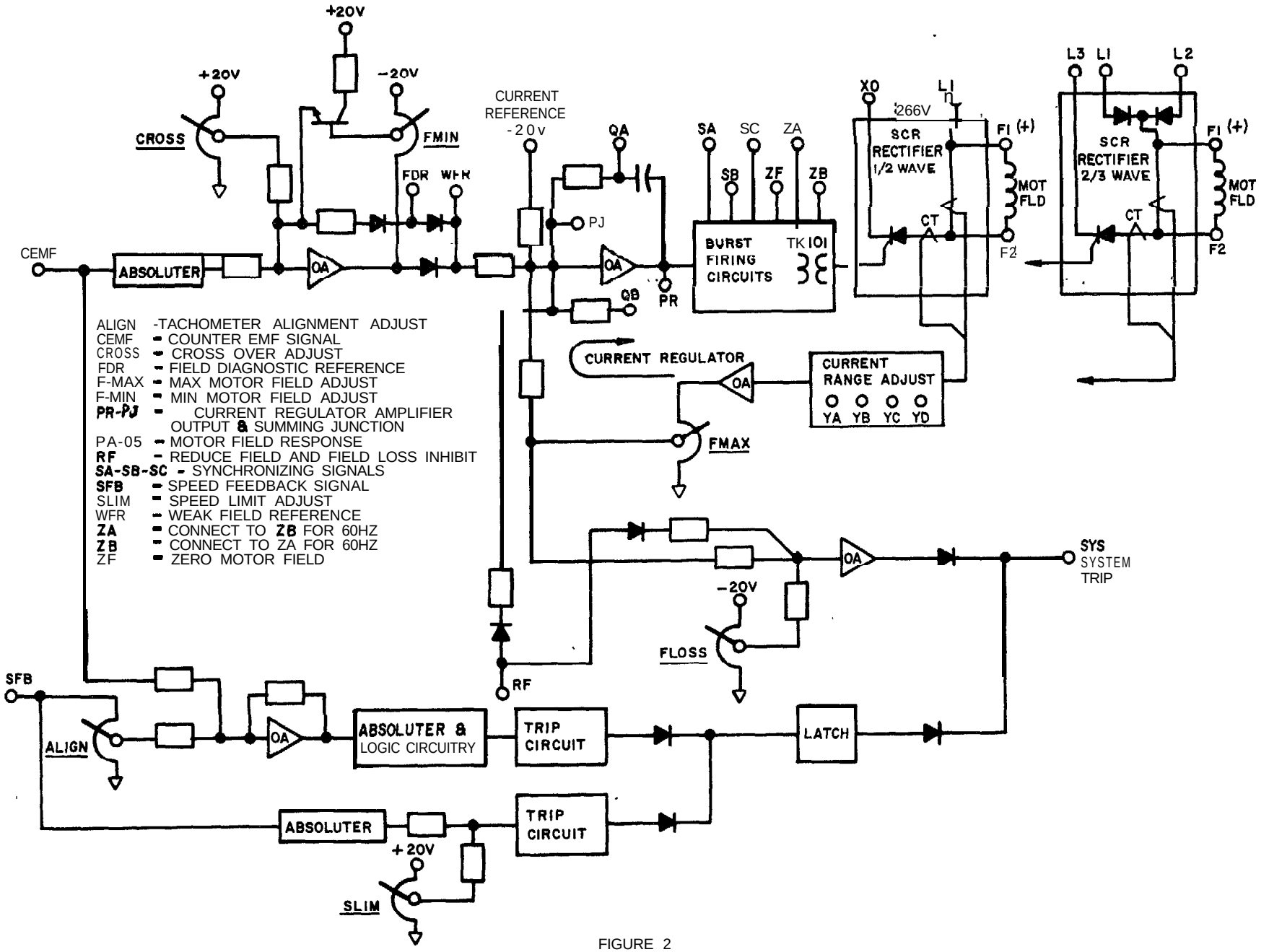

FIGURE 2
Motor Field Control Block Diagram

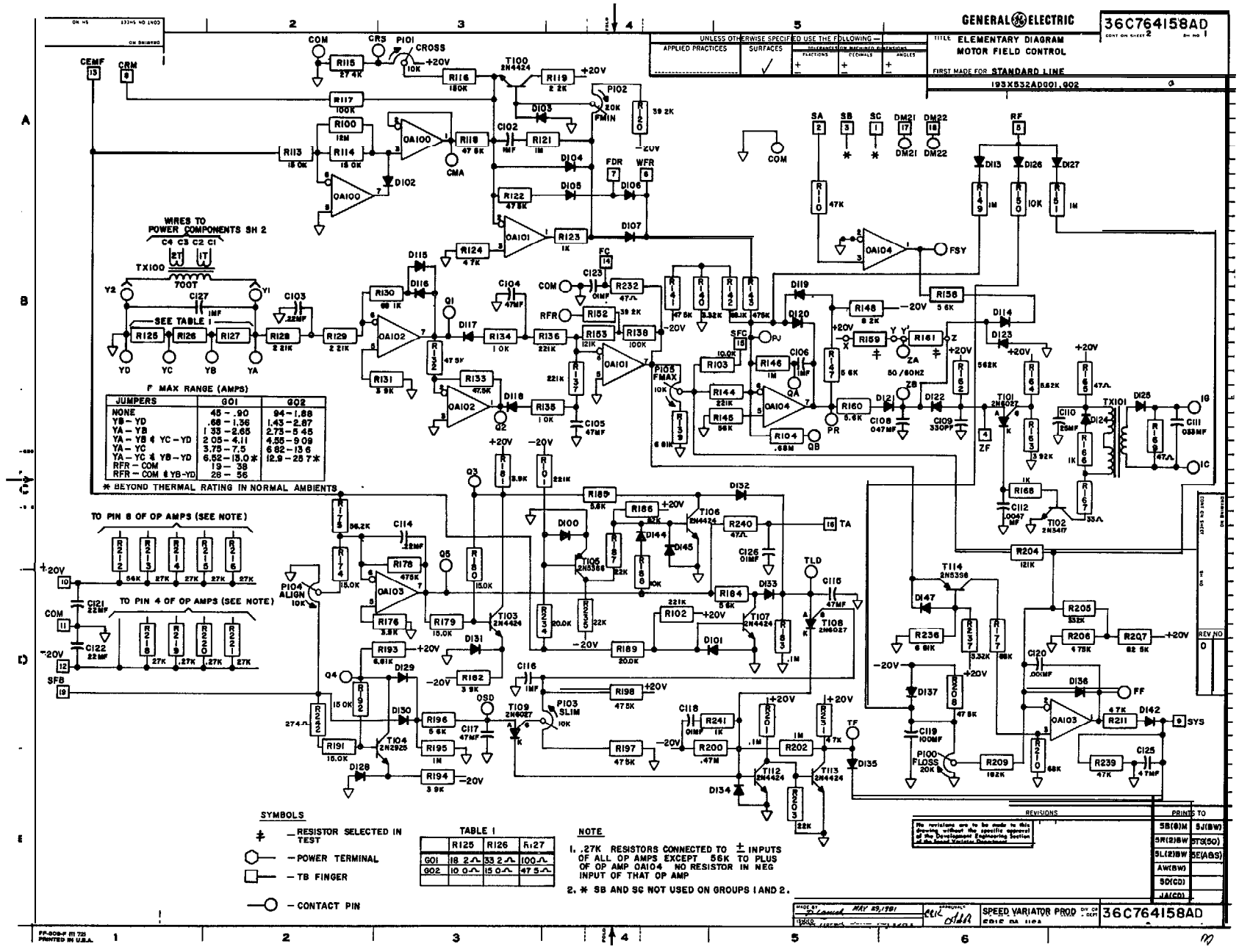
GENERAL ELECTRIC
36C764158AD
TITLE: ELEMENTARY DIAGRAM
MOTOR FIELD CONTROL
FIRST MADE FOR STANDARD LINE
193X532AD001, G02
F MAX RANGE (AMPS)
JUMPERS | G01 | G02
NONE | 45 - .90 | 94 - 1.88
YB - YD | .68 - 1.36 | 1.43 - 2.87
YA - YB | 1.33 - 2.65 | 2.73 - 5.45
YA - YB & YC - YD | 2.05 - 4.11 | 4.55 - 9.09
YA - YC | 3.75 - 7.5 | 6.82 - 13.6
YA - YC & YB - YD | 6.52 - 13.0 * | 12.9 - 25.7 *
RFR - COM | 19 - 38 |
RFR - COM & YB-YD | 28 - 56 |
* BEYOND THERMAL RATING IN NORMAL AMBIENTS
WIRES TO POWER COMPONENTS SH 2
C4 C3 C2 C1
TX100
700T
SEE TABLE I
TO PIN 8 OF OP AMPS (SEE NOTE)
TO PIN 4 OF OP AMPS (SEE NOTE)
SYMBOLS
‡ — RESISTOR SELECTED IN TEST
— POWER TERMINAL
— TB FINGER
— CONTACT PIN
TABLE I
 | R125 | R126 | R127
G01 | 18.2Ω | 33.2Ω | 100Ω
G02 | 10.0Ω | 15.0Ω | 47.5Ω
NOTE
1. .27K RESISTORS CONNECTED TO ± INPUTS OF ALL OP AMPS EXCEPT 56K TO PLUS OF OP AMP OA104 NO RESISTOR IN NEG INPUT OF THAT OP AMP
2. * SB AND SC NOT USED ON GROUPS 1 AND 2.
REVISIONS
PRINTS TO
SB(8)M
SR(2)BW
SL(2)BW
AW(BW)
SD(CD)
JA(CD)
SPEED VARIATOR PROD
36C764158AD

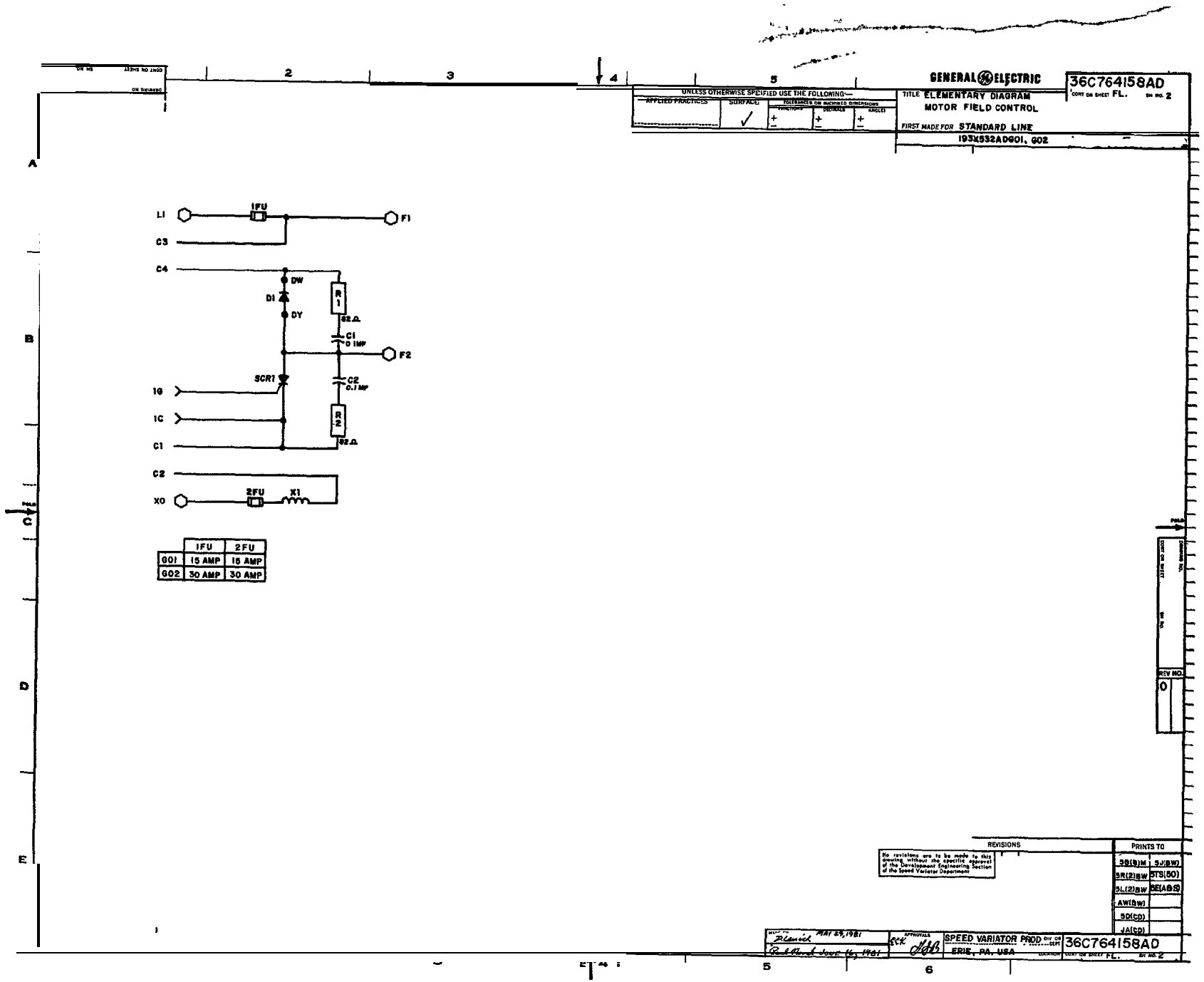
GENERAL ELECTRIC
36C764158AD
CONT ON SHEET FL. SH NO. 2
UNLESS OTHERWISE SPECIFIED USE THE FOLLOWING—
APPLIED PRACTICES
SURFACE
TOLERANCES ON MACHINED DIMENSIONS
FRACTIONS
DECIMALS
ANGLES
TITLE ELEMENTARY DIAGRAM
MOTOR FIELD CONTROL
FIRST MADE FOR STANDARD LINE
193X532AD601, 602
L1
1FU
F1
C3
C4
DW
D1
DY
R1
82Ω
C1
0.1MF
F2
SCR1
C2
0.1MF
1G
1C
R2
82Ω
C1
C2
X0
2FU
X1
1FU 2FU
G01 15 AMP 15 AMP
G02 30 AMP 30 AMP
REV NO.
0
REVISIONS
No revisions are to be made to this drawing without the specific approval of the Development Engineering Section of the Speed Variator Department
PRINTS TO
5B(B)M 5J(BW)
5R(2)BW 5TS(50)
5L(2)BW 5E(A&S)
AW(BW)
5D(CD)
JA(CD)
MAY 29, 1981
June 16, 1981
APPROVALS
SPEED VARIATOR PROD
ERIE, PA. USA
36C764158AD
CONT ON SHEET FL. SH NO. 2

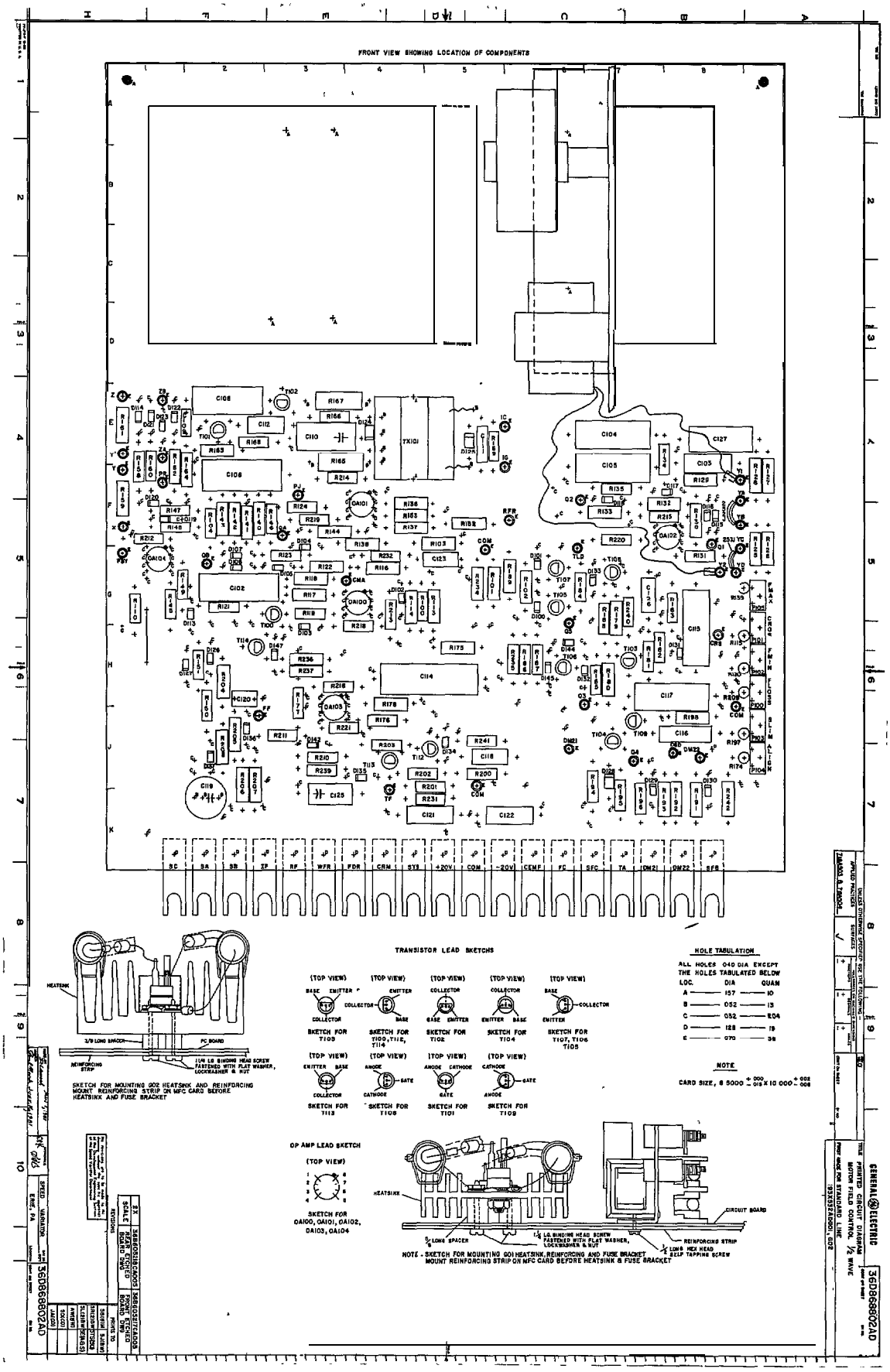
FRONT VIEW SHOWING LOCATION OF COMPONENTS
TRANSISTOR LEAD SKETCHS
HOLE TABULATION
ALL HOLES .040 DIA EXCEPT THE HOLES TABULATED BELOW
LOC. DIA QUAN
A 157 10
B 052 13
C 032 204
D 128 19
E 070 38
NOTE
CARD SIZE, 6.5000 +.000 -.015 X 10.000 +.002 -.006
SKETCH FOR MOUNTING 002 HEATSINK AND REINFORCING MOUNT REINFORCING STRIP ON MFC CARD BEFORE HEATSINK AND FUSE BRACKET
OP AMP LEAD SKETCH
SKETCH FOR OA100, OA101, OA102, OA103, OA104
NOTE - SKETCH FOR MOUNTING 001 HEATSINK, REINFORCING AND FUSE BRACKET MOUNT REINFORCING STRIP ON MFC CARD BEFORE HEATSINK & FUSE BRACKET
GENERAL ELECTRIC
PRINTED CIRCUIT DIAGRAM
MOTOR FIELD CONTROL 1/2 WAVE
36D868802AD

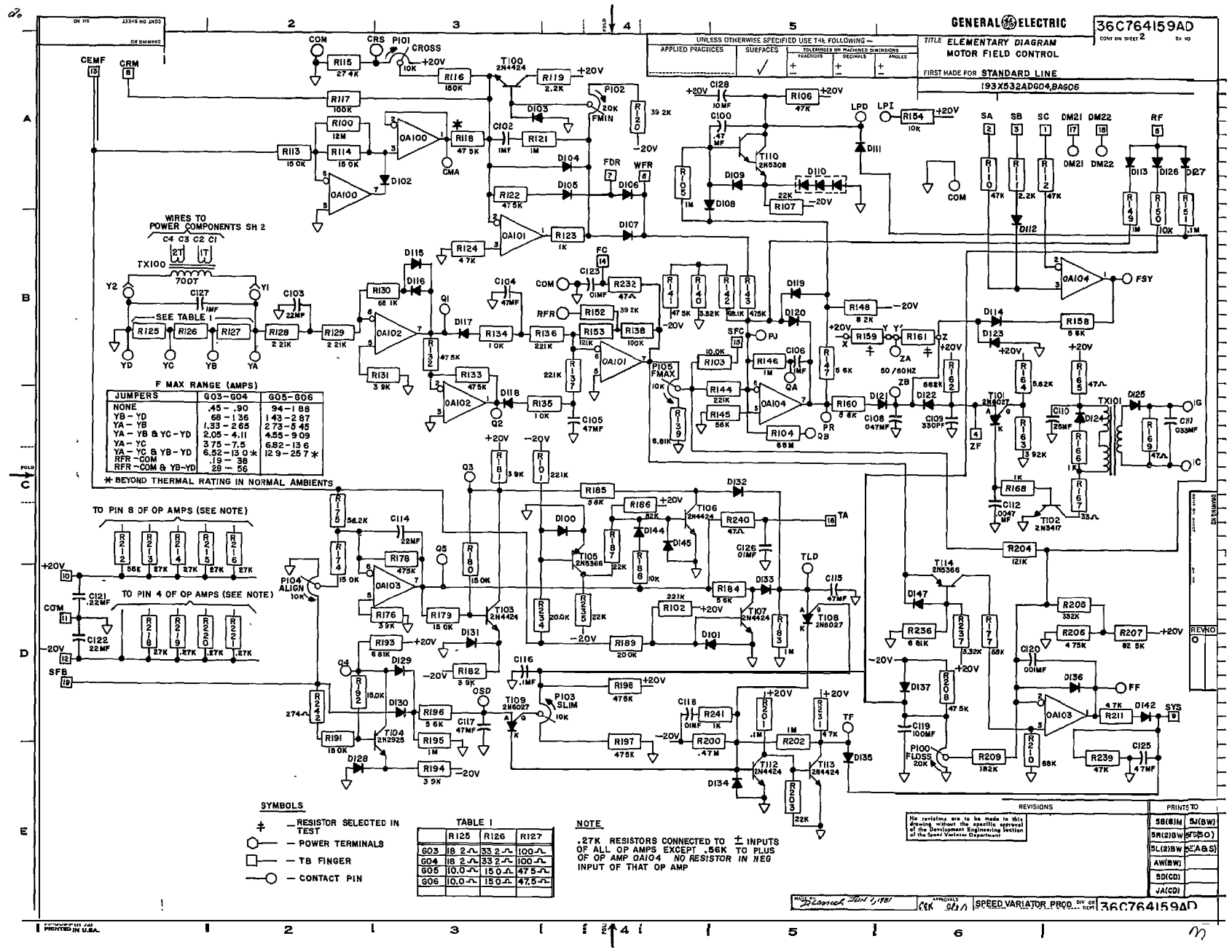

F MAX RANGE (AMPS)

JUMPERS	G03-G04	G05-G06
NONE	.45 - .90	94-1 88
YB - YD	68 - 1 36	1 43 - 2 87
YA - YB	1.33 - 2 65	2 73 - 5 45
YA - YB & YC - YD	2.05 - 4.11	4.55 - 9 09
YA - YC	3 75 - 7.5	6.82 - 13 6
YA - YC & YB - YD	6.52 - 13 0 *	12 9 - 25 7 *
RFR - COM	.19 - 38	
RFR - COM & YB-YD	28 - 56	

* BEYOND THERMAL RATING IN NORMAL AMBIENTS

TABLE 1

	R125	R126	R127
G03	18 2 Ω	33 2 Ω	100 Ω
G04	18 2 Ω	33 2 Ω	100 Ω
G05	10.0 Ω	15 0 Ω	47 5 Ω
G06	10.0 Ω	15 0 Ω	47.5 Ω

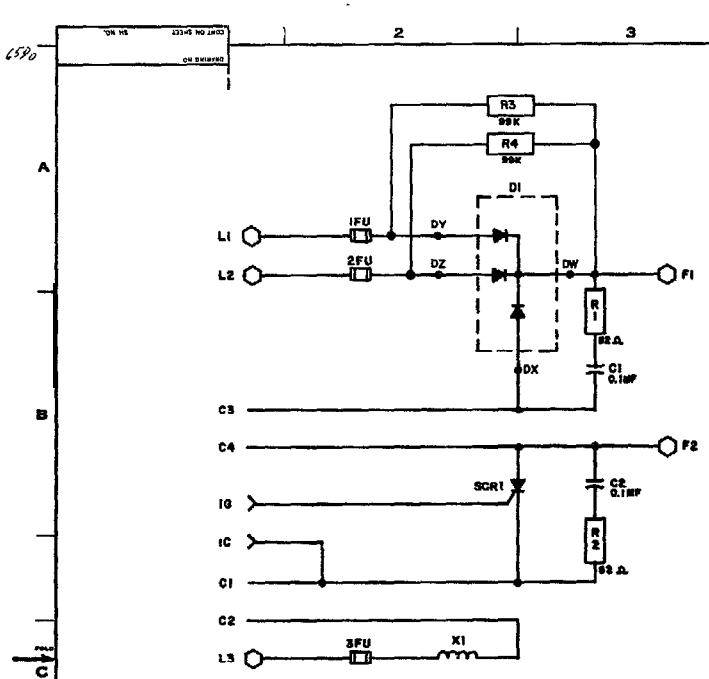

	1FU	2FU	3FU
803,4	15 AMP	15 AMP	15 AMP
805,6	30AMP	30 AMP	30AMP

GENERAL ELECTRIC 36C764159AD

UNLESS OTHERWISE SPECIFIED USE THE FOLLOWING

APPLIED PRACTICES	SURFACES	TOLERANCES ON MACHINED DIMENSIONS FRACTIONS	DECIMALS	ANGLES
	✓	±	±	±

TITLE ELEMENTARY DIAGRAM
MOTOR FIELD CONTROL

FIRST MADE FOR STANDARD LINE

193X532AD604,BA006

REV NO. 0

REVISIONS

No revisions are to be made to this drawing without the specific approval of the Development Engineering Section of the Speed Variator Department

PRINTS TO	
3B(8)M	9J(BW)
9R(2)BW	5T3(50)
9L(2)BW	5E(A&S)
AW(BW)	
5D(CD)	
JA(CD)	

APPROVALS

SPEED VARIATOR PROD DIV OR DEPT — ERIE, PA USA LOCATION

36C764159AD CONT ON SHEET FL SH NO 2

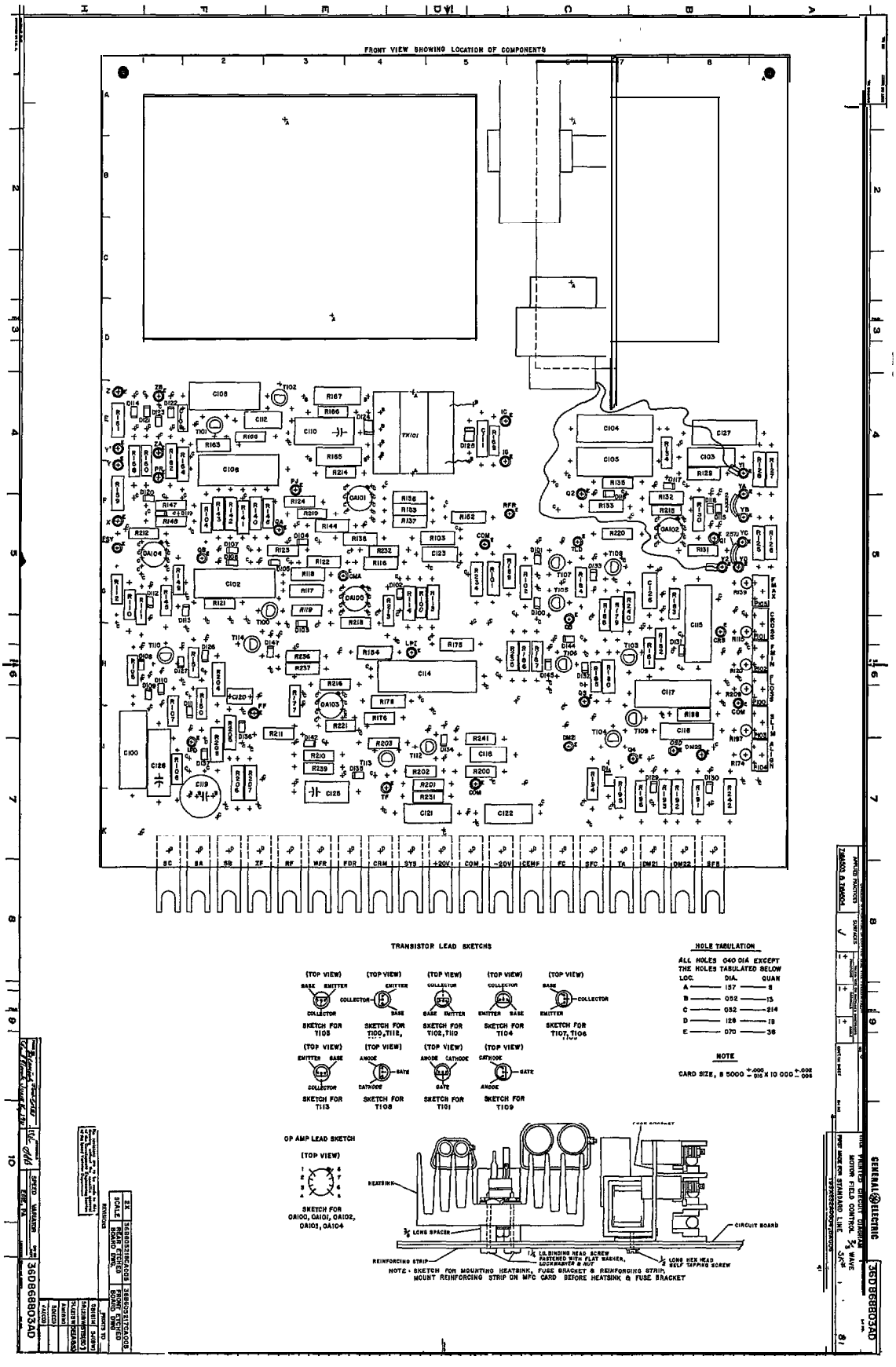
FRONT VIEW SHOWING LOCATION OF COMPONENTS
SC
SA
SB
ZF
RF
WFR
FDR
CRM
SYS
+20V
COM
-20V
CEMF
FC
SFC
TA
DM21
DM22
SFB
TRANSISTOR LEAD SKETCHS
SKETCH FOR T108
SKETCH FOR T100, T118, T117
SKETCH FOR T102, T110
SKETCH FOR T104
SKETCH FOR T107, T106
SKETCH FOR T113
SKETCH FOR T108
SKETCH FOR T101
SKETCH FOR T109
OP AMP LEAD SKETCH
SKETCH FOR QA100, QA101, QA102, QA103, QA104
HOLE TABULATION
ALL HOLES .040 DIA EXCEPT THE HOLES TABULATED BELOW
LOC. DIA. QUAN
A 157 8
B 052 15
C 052 214
D 128 18
E 070 36
NOTE
CARD SIZE, B 5000 +.000 -.015 X 10 000 +.005 -.005
HEATSINK
CIRCUIT BOARD
3/4 LONG SPACER
REINFORCING STRIP
1/4 LG BINDING HEAD SCREW FASTENED WITH FLAT WASHER, LOCKWASHER & NUT
1/4 LONG HEX HEAD 2 SELF TAPPING SCREW
NOTE - SKETCH FOR MOUNTING HEATSINK, FUSE BRACKET & REINFORCING STRIP. MOUNT REINFORCING STRIP ON MFC CARD BEFORE HEATSINK & FUSE BRACKET
GENERAL ELECTRIC
MOTOR FIELD CONTROL
360B88B03AD

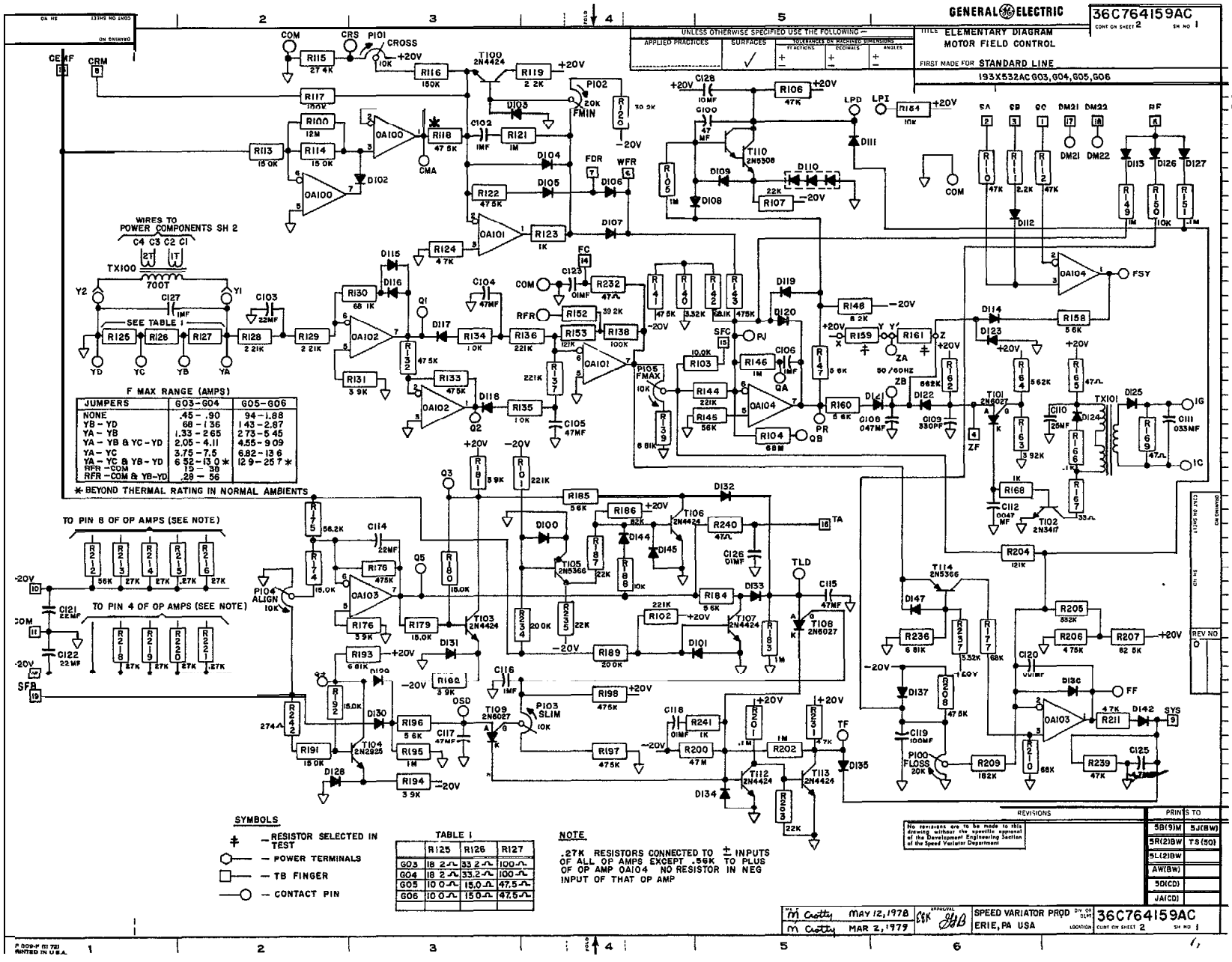
GENERAL ELECTRIC
36C764159AC
ELEMENTARY DIAGRAM
MOTOR FIELD CONTROL
FIRST MADE FOR STANDARD LINE
193X532AC G03, G04, G05, G06
F MAX RANGE (AMPS)
JUMPERS | G03-G04 | G05-G06
NONE | .45 - .90 | 94 - 1.88
YB - YD | 68 - 1.36 | 1.43 - 2.87
YA - YB | 1.33 - 2.65 | 2.73 - 5.45
YA - YB & YC - YD | 2.05 - 4.11 | 4.55 - 9.09
YA - YC | 3.75 - 7.5 | 6.82 - 13.6
YA - YC & YB - YD | 6.52 - 13.0 * | 12.9 - 25.7 *
RFR - COM | .19 - .38 |
RFR - COM & YB - YD | .28 - .56 |
* BEYOND THERMAL RATING IN NORMAL AMBIENTS
TABLE I
	R125	R126	R127
G03	18.2Ω	33.2Ω	100Ω
G04	18.2Ω	33.2Ω	100Ω
G05	10.0Ω	15.0Ω	47.5Ω
G06	10.0Ω	15.0Ω	47.5Ω
SYMBOLS
± — RESISTOR SELECTED IN TEST
— POWER TERMINALS
— TB FINGER
— CONTACT PIN
NOTE
.27K RESISTORS CONNECTED TO ± INPUTS OF ALL OP AMPS EXCEPT .56K TO PLUS OF OP AMP OA104. NO RESISTOR IN NEG INPUT OF THAT OP AMP
REVISIONS
No revisions are to be made to this drawing without the specific approval of the Development Engineering Section of the Speed Variator Department
PRINTS TO
5B(9)M 5J(BW)
5R(21)BW T5(50)
5L(21)BW
AW(BW)
5D(CD)
JA(CD)
M Crotty MAY 12, 1978
M Crotty MAR 2, 1979
SPEED VARIATOR PROD
ERIE, PA USA
36C764159AC

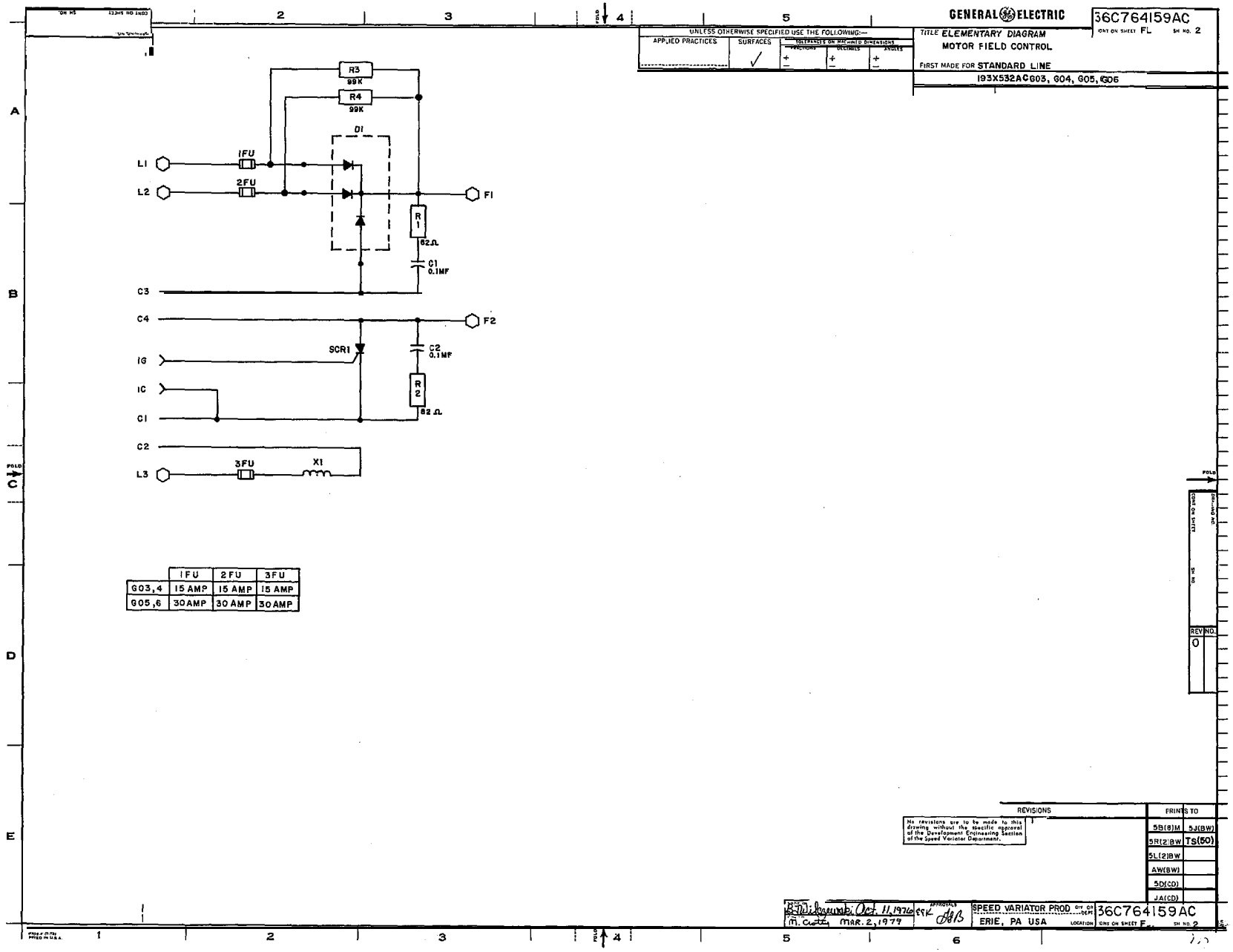

	1FU	2FU	3FU
G03,4	15 AMP	15 AMP	15 AMP
G05,6	30 AMP	30 AMP	30 AMP

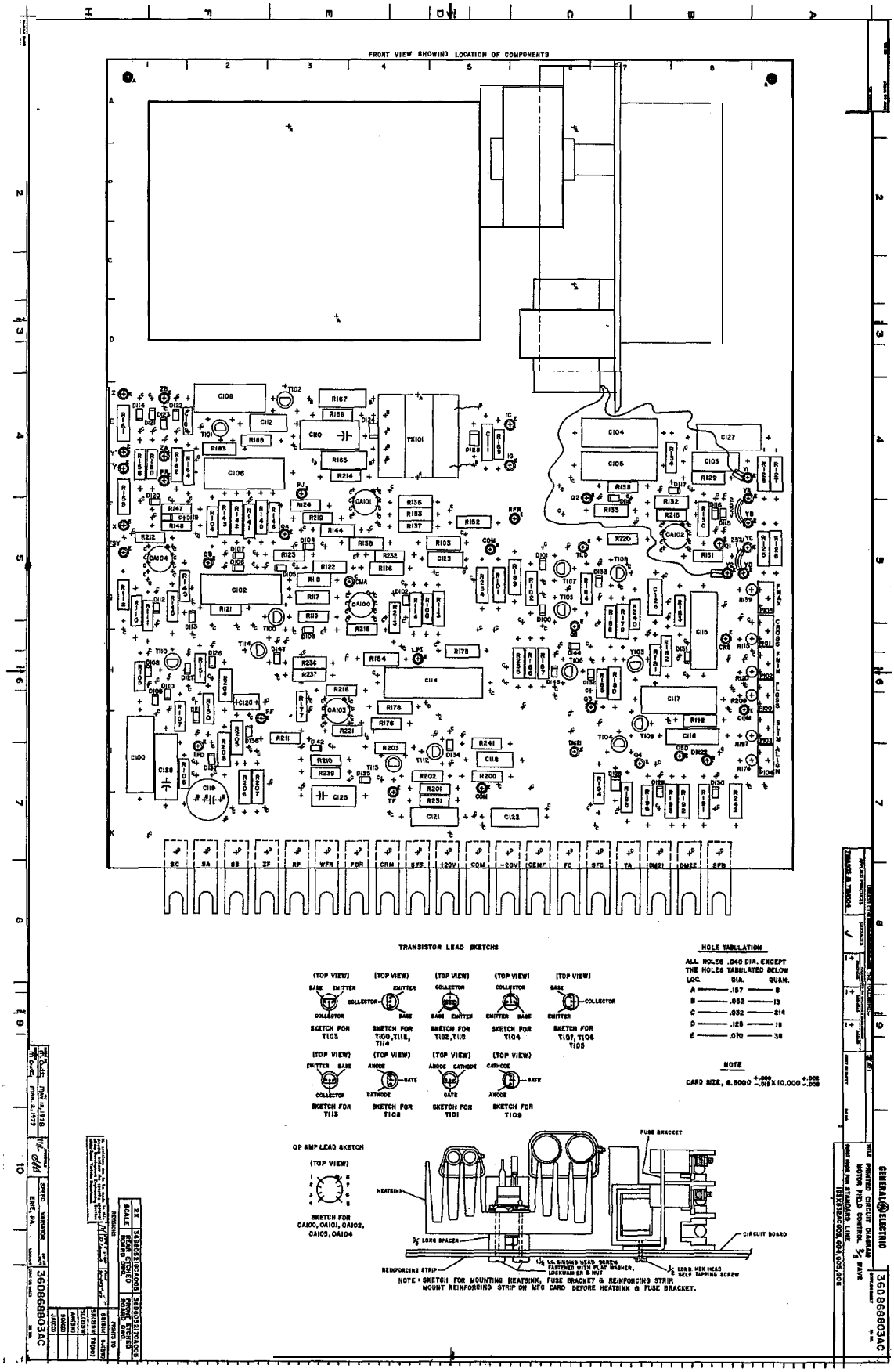
FRONT VIEW SHOWING LOCATION OF COMPONENTS
TRANSISTOR LEAD SKETCHS
HOLE TABULATION
ALL HOLES .040 DIA. EXCEPT THE HOLES TABULATED BELOW
LOC. DIA. QUAN.
A .157 8
B .052 13
C .032 214
D .128 18
E .070 38
NOTE
CARD SIZE, 8.5000 +.000 -.015 X 10.000 +.002 -.008
QP AMP LEAD SKETCH
SKETCH FOR OA100, OA101, OA102, OA103, OA104
FUSE BRACKET
HEATSINK
CIRCUIT BOARD
LONG SPACER
REINFORCING STRIP
LONG HEX HEAD SELF TAPPING SCREW
NOTE: SKETCH FOR MOUNTING HEATSINK, FUSE BRACKET & REINFORCING STRIP. MOUNT REINFORCING STRIP ON MFC CARD BEFORE HEATSINK & FUSE BRACKET.
GENERAL ELECTRIC
PRINTED CIRCUIT DIAGRAM
MOTOR FIELD CONTROL
STANDARD LINE
36D868803AC

GENERAL ELECTRIC COMPANY
SPEED VARIATOR PRODUCTS OPERATION
ERIE, PENNSYLVANIA 16531

GENERAL ELECTRIC

GEK-24971D 12/85 2M (P)