SWITCHGEAR

RENEWAL PARTS ORDERING GUIDE

TYPES FB-500A, FC-500A and FC-750A, 15-KV AIR-MAGNETIC CIRCUIT BREAKERS

With

SOLENOID OR STORED ENERGY OPERATORS

Supplement To 18X3088

18X4440-01

December, 1973

HOW TO USE YOUR RENEWAL PARTS ORDERING GUIDE

1. Locate the part or parts to be replaced in one of the drawings in this manual. Refer to the usage code table on page ii for drawings applicable to your breaker.
2. Identify each part by item number, description and part number. Give drawing figure number in which part is shown.
3. Include breaker type, rating and breaker serial number with your order.
4. Place order with your Allis-Chalmers representative.

ORDERING EXAMPLE

Type FC-500A Rated Amps 1200 Serial Number H61064-1

Type of Operator: [X] Solenoid [ ] Stored Energy

Renewal Parts Ordering Guide 18X4440

Fig	Item	Description	Part Number	Quantity
1	3	Phase Barrier	71-208-415-503	1
1	35	Angle	71-113-680-001	2
2	32	Arcing Contact	71-112-966-501	1

If required part is not identified in this manual ------

1. Make a copy of the drawing figure in which the part would appear.
2. Indicate with arrows or other markings location of part.
3. Describe or sketch required part.
4. Include breaker type, rating and breaker serial number with your order.
5. Place order with your Allis-Chalmers representative.

TABLE OF CONTENTS

	Drawing No.	Figure	Page
Solenoid Operated Breaker Assembly	72-422-911	1	1
Solenoid Operated Basic Breaker	18-466-955	1	1
Stud & Support	71-401-626	2	2
FC-500A Arc Chute	71-401-287	3	3
FB-500A and FC-750A Arc Chute	71-401-440	4	4
FC-500A Solenoid Operator & Frame	72-420-022	5	5
FB-500A and FC-750A Solenoid Operator & Frame	72-420-023	6	6
FC-500A Solenoid Operator	72-320-029	7	7
FB-500A and FC-750A Solenoid Operator	72-320-036	8	8
Stored Energy Breaker Assembly	72-422-916	9	9
Stored Energy Basic Breaker	18-466-956	9	9
Stored Energy Operator and Frame	72-420-083	10	10
Stored Energy Operator	72-420-081	11	11 & 12

USAGE CODE TABLE

Type	Application	Operator	Top Level Assembly	Usage Code*
FC-500A	1200 AMP	Solenoid	72-422-911-604	A
FC-500A	1200 AMP (60 KA)	Solenoid	72-422-911-605	B
FC-500A	1200/2000 AMP	Solenoid	72-422-911-606	C
FC-500A	2000 AMP (60KA)	Solenoid	72-422-911-607	D
FB-500A/FC-750A	1200 AMP	Solenoid	72-422-911-608	E
FB-500A/FC-750A	1200/2000 AMP	Solenoid	72-422-911-609	F
FB-500A/FC-750A	2000 AMP	Solenoid	72-422-911-610	G
FC-500A	1200 AMP	Stored Energy	72-422-916-604	H
FC-500A	1200 AMP (60KA)	Stored Energy	72-422-916-605	I
FC-500A	1200/2000 AMP	Stored Energy	72-422-916-606	J
FC-500A	2000 AMP (60KA)	Stored Energy	72-422-916-607	K
FB-500A/FC-750A	1200 AMP	Stored Energy	72-422-916-608	L
FB-500A/FC-750A	1200/2000 AMP	Stored Energy	72-422-916-609	M
FB-500A/FC-750A	2000 AMP	Stored Energy	72-422-916-610	N

*If no usage code appears in the "USAGE" column of the following parts lists, the part is used on all assemblies listed in the figure title.

ITEM	DESCRIPTION	PART NUMBER	USAGE
1	Contact Finger Ass'y.	71-201-738-502	ABCEF
		71-106-079-501	CF
		71-201-458-502	DG
2	Channel	72-120-378-001	ABCD
		71-116-681-501	EFG
3	Phase Barrier-Right	71-208-415-503	ABCD
4	Panel Assembly	71-206-907-503	ABCD
5	Phase Barrier	71-208-415-501	EFG
6	Arc Chute Assembly	71-401-287-501	ABCD
		71-401-440-503	EFG
7	Washer	71-019-219-015	ABCD
		71-019-219-020	EFG
8	Washer	71-107-100-002	
9	Label	71-108-146-001	
10	Indicator	71-111-259-001	
11	Panel	71-113-398-001	
12	Spring	71-113-600-001	
13	Strap	71-114-302-001	
14	Indicator	71-167-932-001	
15	Connector	71-208-263-002	
16	Barrier	71-208-670-004	
17	Block	71-117-870-001	
18	Cover	72-220-077-001	
19	Strap	71-115-588-001	EFG
20	Support	71-115-645-001	EFG
21	Barrier	71-116-679-001	
22	Support	71-302-650-001	ABCD
		71-302-903-001	EFG
23	Block Assembly	18-657-410-597	
24	Block Assembly	18-657-410-598	
25	Label	71-113-871-001	

ITEM	DESCRIPTION	PART NUMBER	USAGE
26	Phase Barrier-Left	71-208-415-502	ABCD
27	Panel Assembly	71-206-907-507	EFG
28	Basic Breaker Ass'y.	18-466-955-504	A
	(Includes items 30	18-466-955-505	B
	thru 42 below)	18-466-955-506	C
		18-466-955-507	D
		18-466-955-508	E
		18-466-955-509	F
		18-466-955-510	G
29	Frame & Operator	72-420-022-501	ABCD
		72-420-023-501	EFG
30	Pipe Strap	72-120-155-001	EFG
		00-691-083-006	ABCD
31	Shim	71-110-641-003	
32	Shim	71-110-641-004	
33	Link	71-113-440-001	
34	Shim	71-113-679-001	
35	Angle	71-113-680-001	
36	Barrier	71-113-804-001	
37	Barrier	71-113-805-001	
38	Guard	71-118-452-002	
39	Pin	71-164-062-012	
40	Washer	71-164-152-008	
41	Header & Tubes	71-208-524-001	
42	Stud and Support	71-401-626-501	A
	(See Figure	71-401-626-503	B
		71-401-626-508	C
		71-401-626-502	D
		71-401-626-506	E
		71-401-626-510	F
		71-401-626-507	G

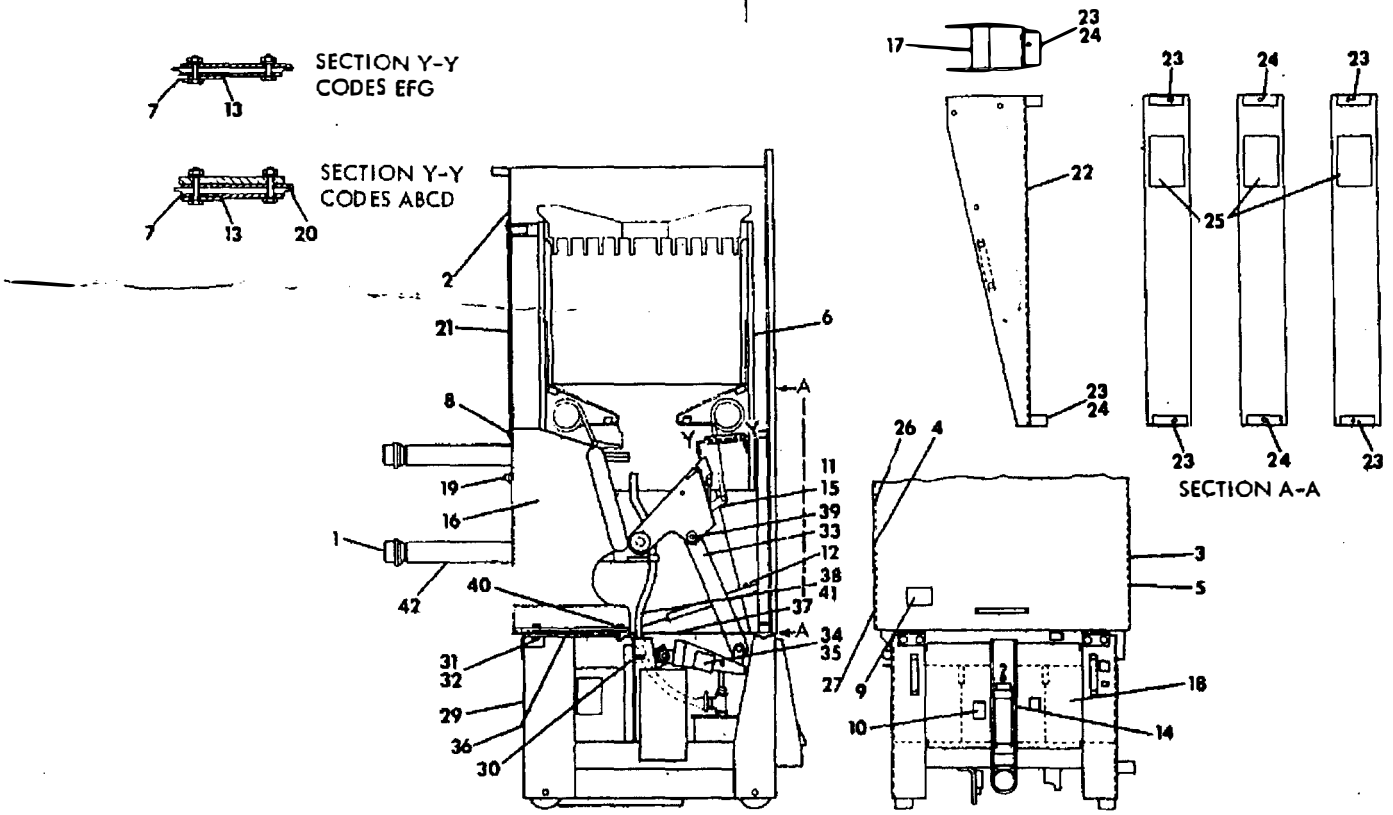

Figure 1. Solenoid Operated Breaker Assembly (Codes A through G; See Code Table, page ii) (72-422-911) (18-466-955)

ITEM	DESCRIPTION	PART NUMBER	USAGE
1	Support Assembly	72-320-044-001	ABHI
		72-320-044-002	CDJK
		18-721-438-501	EL
		18-721-438-502	FGMN
2	Top Stud Assembly	71-208-214-503	BI
		71-208-214-502	DGKN
		71-208-214-508	CFJM
		71-208-214-501	AH
		71-208-214-507	EL
3	Low Stud Assembly	71-208-196-501	ABHI
		71-208-196-505	CJ
		71-208-196-503	EL
		71-208-196-504	DGKN
		71-208-196-506	FM
4	Tube	71-113-488-001	ABEHIL
		71-113-896-001	CDFGJK
			MN
5	Tube	71-113-488-002	ABEHIL
		71-113-896-002	CDFGJK
			MN
6	Tube	71-170-947-007	ABHI
		71-170-947-008	CDEFGJ
			KLMN
7	Spacer	71-107-716-008	ABHI
		71-107-716-007	CDJK
8	Disc Arm Assembly	71-208-255-506	BI
		71-208-255-504	CDEFGJ
			KLMN
		71-208-255-502	AH
9	Disc Arm Assembly	71-208-255-505	BI
		71-208-255-503	CDEFGJ
			KLMN
		71-208-255-501	AH
10	Contact Finger Ass'y.	18-657-372-501	
		18-657-372-505	BI
11	Not Used		
12	Tubing	72-120-735-002	BI
		72-120-735-001	AH
		72-120-735-003	CDEFGJ
			KLMN

ITEM	DESCRIPTION	PART NUMBER	USAGE
13	Not Used		
14	Not Used		
15	Plate	71-112-910-001	BCDIJK
16	Nozzle	71-210-349-001	
17	Spacer	71-107-716-007	
18	Rod	71-110-282-002	
19	Strip	71-113-681-001	
20	Spring Washer	71-167-537-001	
21	Washer	71-177-196-003	
22	Arcing Contact Ass'y.	71-112-913-501	ABCDHI
			JK
		71-112-913-502	EFGLMN
23	Yoke	71-112-934-001	ABCDHI
			JK
		71-114-697-001	EFGLMN
24	Tubing	71-172-682-010	
25	Bar	71-113-038-001	
26	Spacer	71-112-948-001	
27	Washer	71-140-901-001	
28	Washer	71-177-196-005	ABCDHI
			JK
		71-114-701-001	EFGLMN
29	Washer	71-158-647-015	
30	Spring	72-120-400-001	
31	Link	71-118-284-001	
32	Arcing Contact	71-112-966-501	ABCDHI
		71-112-966-502	JK
32A		71-112-913-503	EFGLMN
33	Channel	18-657-377-501	EFGLMN
34	Plate	71-112-911-001	
35	Barrier	71-112-971-001	
36	Strip	71-114-147-001	
37	Insulation	71-114-148-001	
38	Washer	71-152-809-030	
39	Spacer	71-115-589-001	EFGLMN
40	Washer	71-115-941-001	EFGLMN

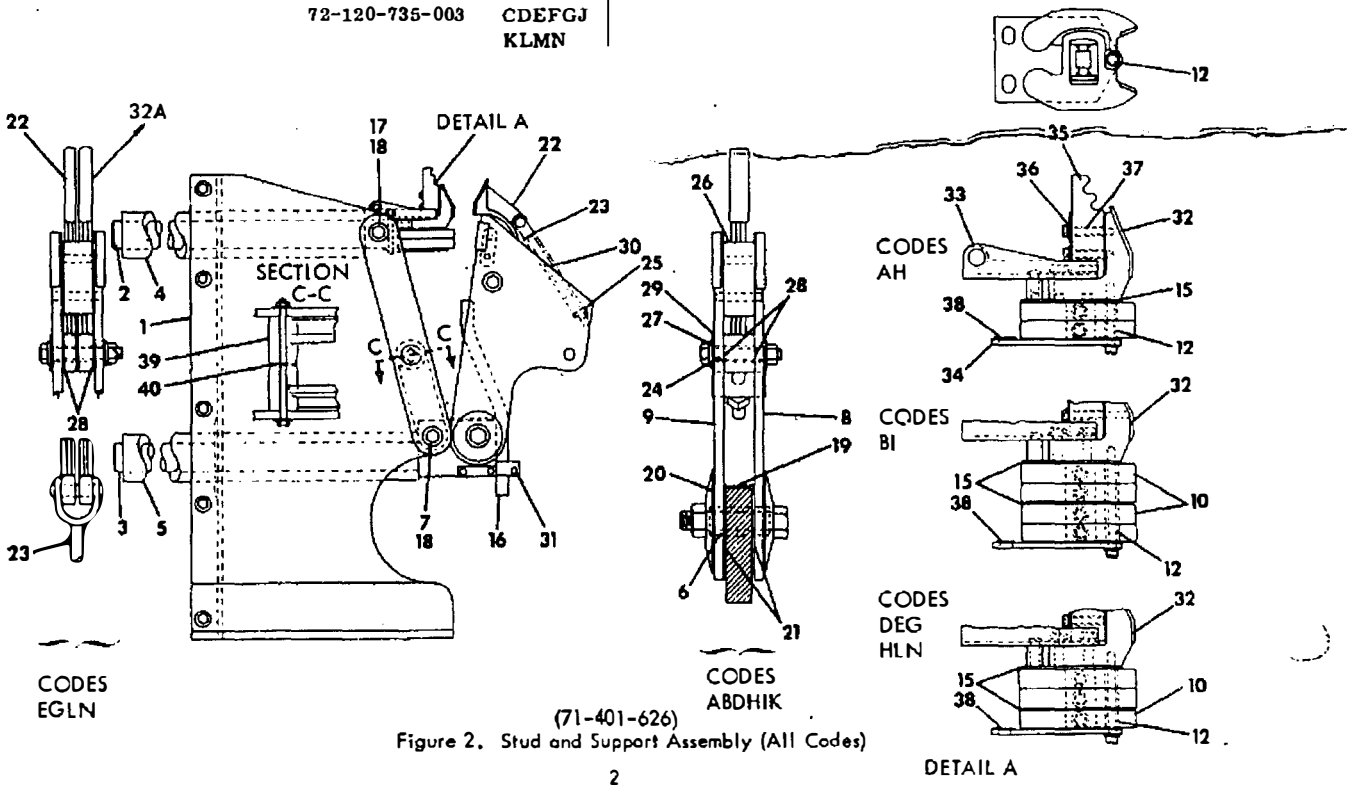

(71-401-626)
Figure 2. Stud and Support Assembly (All Codes)

ITEM	DESCRIPTION	PART NUMBER	USAGE	ITEM	DESCRIPTION	PART NUMBER	USAGE
1	Channel	71-302-531-501		8	Bar	71-112-987-001	
2	Channel	71-302-531-502		9	Block	71-112-993-001	
3	Barrier Stack	71-302-838-501		10	Block	71-112-989-001	
4	Core	71-200-806-502		11	Coil (Rear)	71-208-183-001	
5	Pole Piece	71-112-924-501		12	Arc Runner	71-302-559-001	
6	Barrier	71-208-427-501		13	Coil (Front)	71-302-562-001	
7	Strap	71-114-269-001					

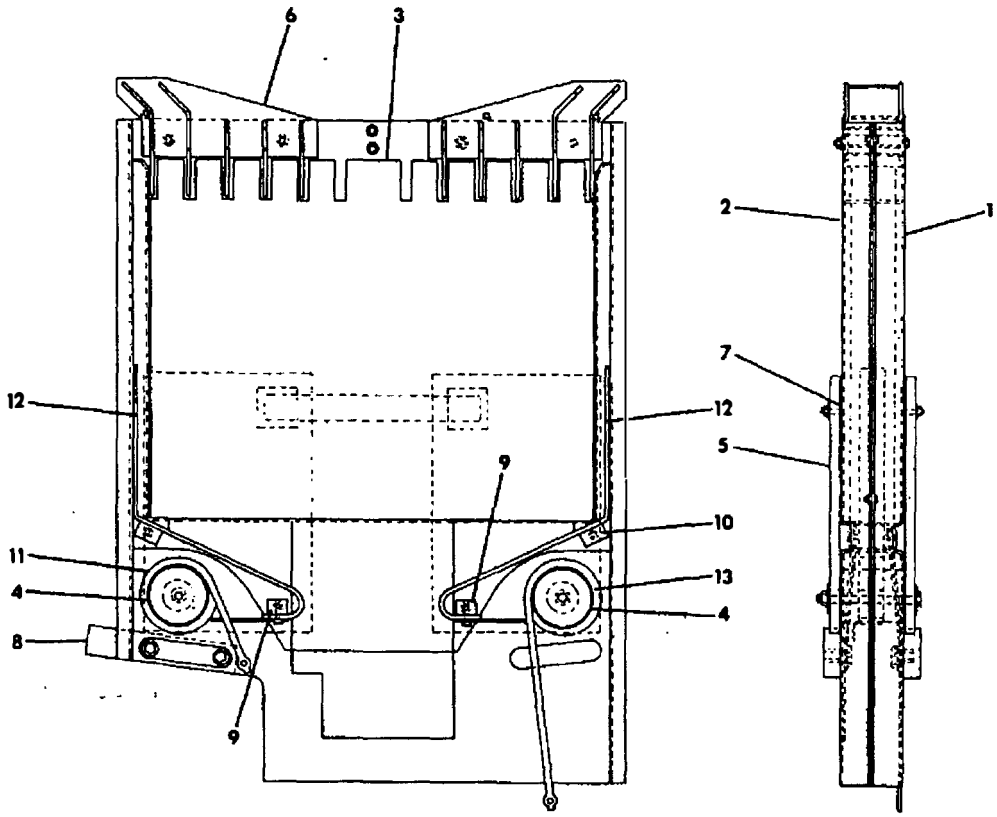

Figure 3. Arc Chute (Codes A through D and H through K; See Code Table, page ii) (71-401-287)

ITEM	DESCRIPTION	PART NUMBER	USAGE	ITEM	DESCRIPTION	PART NUMBER	USAGE
1	Barrier Stack	71-303-149-501		12	Block	71-115-643-001	
2	Core	71-200-806-504		13	Channel	71-115-644-002	
3	Barrier	71-209-698-501		14	Plate	71-115-646-001	
4	Coil (Rear)	71-208-896-501		15	Arc Runner	71-115-648-001	
5	Coil (Front)	71-208-896-502		16	Spacer	71-209-188-001	
6	Pole Piece	71-116-426-501		17	Spacer	71-209-188-002	
7	Core	71-115-647-501		18	Channel Assembly	18-657-372-524	
8	Tube	71-111-912-001		19	Channel Assembly	18-657-372-525	
9	Plate	71-112-771-002		20	Arc Runner	71-302-914-001	
10	Block	71-112-993-002		21	Support	71-303-029-001	
11	Band	71-915-843-005		22	Wedge	71-116-550-001	

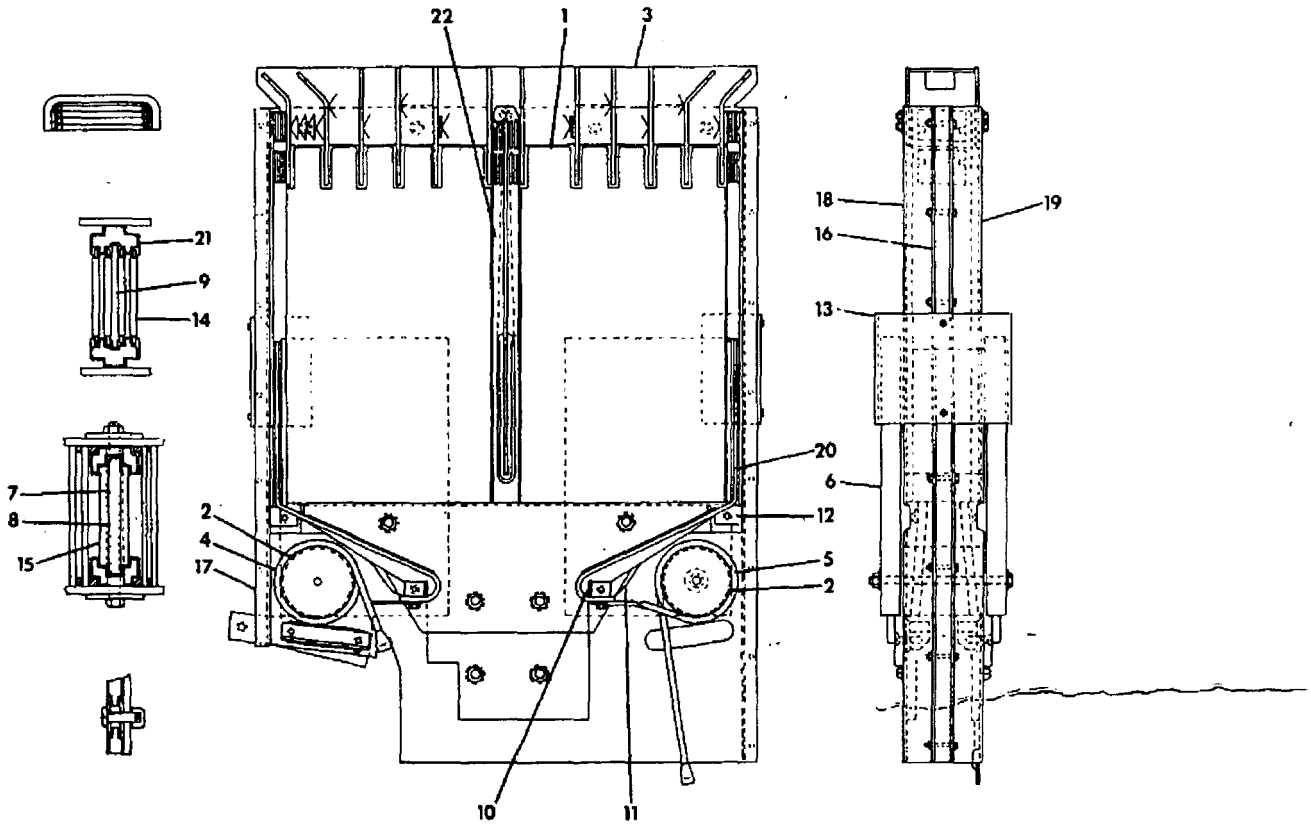

Figure 4. Arc Chute (Codes E through G and L through N; See Code Table, page ii) (71-401-440)

ITEM	DESCRIPTION	PART NUMBER	USAGE
1	Guide	71-113-437-501	
2	Indicator Arm	71-113-474-501	
3	Piston	71-114-161-505	
4	Ground Contact	71-114-787-502	
5	Guide	71-115-432-501	
6	Foot Lever	72-220-080-502	
7	Operator	72-320-029-504	
8	Frame	72-320-035-501	
9	Pin	71-104-754-034	
10	Pin	71-104-754-035	
11	Pin	71-104-754-040	
12	Shoulder Stud	71-108-105-003	
13	Operator Counter	71-110-940-002	
14	Plunger	71-113-442-001	
15	Stop	71-113-478-001	
16	Yoke End	71-113-487-002	
17	Spring	71-113-502-001	
18	Angle	71-113-530-001	
19	Rod End	71-113-541-001	
20	Spring	71-113-621-001	
21	Rod End	71-113-633-001	
22	Spring	71-113-669-001	
23	Cup	71-114-151-001	
24	Compression Spring	71-114-153-001	
25	Bumper	71-114-154-001	
26	Cylinder	71-114-155-003	
27	Packing	71-114-156-001	
28	Valve Disc	71-115-244-001	
29	Shim	71-115-544-001	
30	Compression Spring	71-140-125-001	
31	Rod	71-140-147-032	
32	Spring	71-153-031-001	
33	Pin	71-915-161-029	
34	Angle	71-208-371-001	
35	Handle	72-120-391-001	
36	Ball Joint	00-833-573-003	
37	Yoke End	00-691-701-901	
38	Yoke End	00-691-701-903	

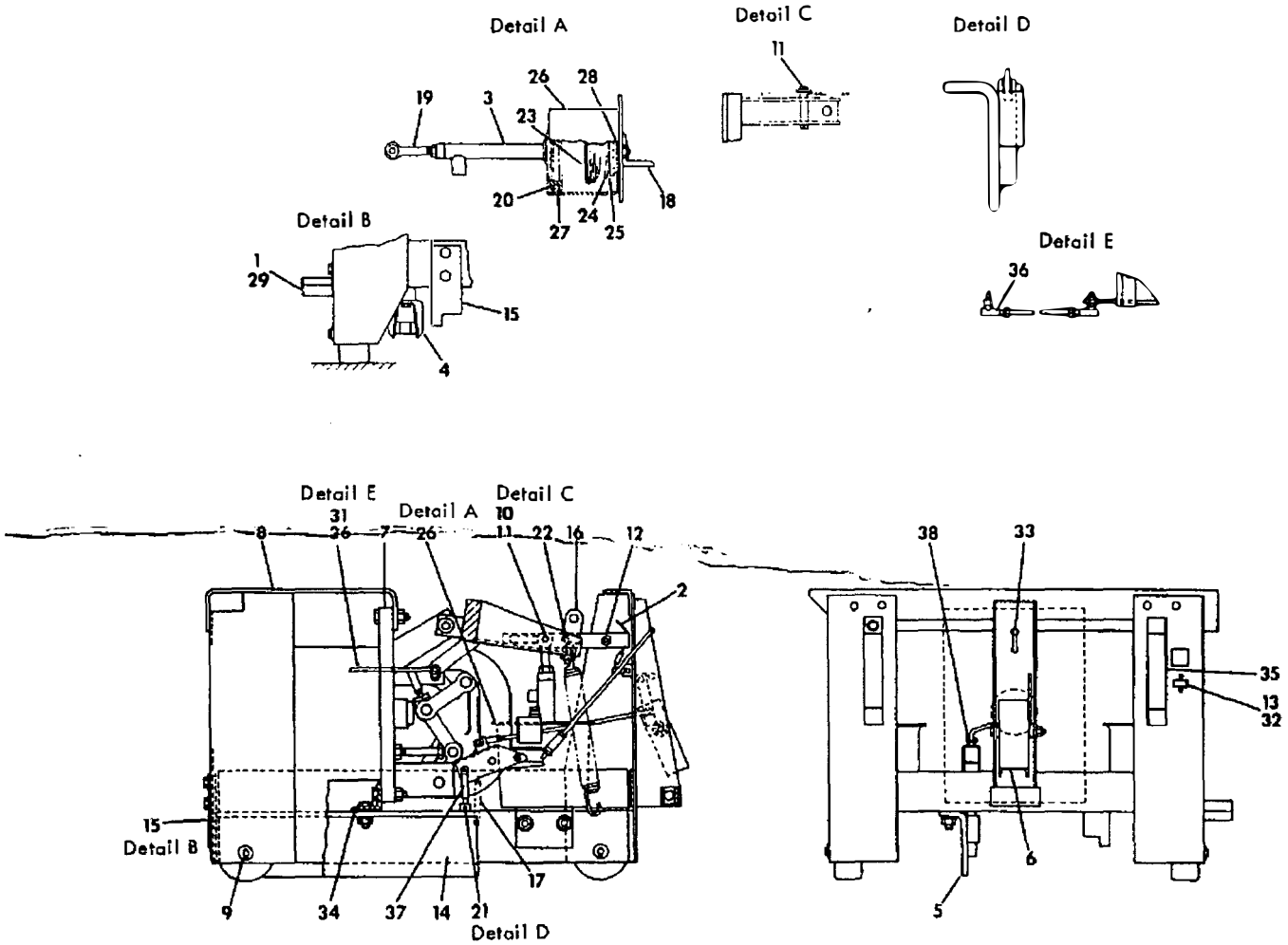

Figure 5. Solenoid Operator and Frame Assembly (Codes A through D; See Code Table, page ii) (72-420-022)

ITEM	DESCRIPTION	PART NUMBER	USAGE
1	Guide	71-113-437-501	
2	Indicator Arm	71-113-474-501	
3	Piston	71-114-161-505	
4	Ground Contact	71-114-787-502	
5	Guide	71-114-177-501	
6	Support	72-120-131-501	
7	Foot Lever	72-220-080-502	
8	Frame	72-320-035-502	
9	Operator	72-320-036-502	
10	Pin	71-104-754-034	
11	Pin	71-104-754-035	
		71-104-754-040	
12	Shoulder Stud	71-108-105-003	
13	Operator Counter	71-110-940-002	
14	Plunger	71-113-442-001	
15	Stop	71-113-478-001	
16	Yoke End	71-113-487-001	
17	Spring	71-113-502-001	
18	Rod End	71-113-541-001	
19	Spring	71-113-621-001	
20	Rod End	71-113-633-001	
21	Cup	71-114-151-001	
22	Compression Spring	71-114-153-001	
23	Bumper	71-114-154-001	
24	Cylinder	71-114-155-003	
25	Packing	71-114-156-001	
26	Spring	71-114-733-001	
27	Valve Disc	71-115-244-001	
28	Shim	71-115-544-001	
29	Compression Spring	71-140-125-001	
30	Rod	71-140-147-032	
31	Spring	71-153-031-001	
32	Washer	71-163-273-001	
33	Pin	71-915-161-029	
34	Angle	72-120-129-001	
35	Guide	72-120-156-001	
36	Handle	72-120-391-001	
37	Ball Joint	00-833-573-003	
38	Yoke End	00-691-701-901	
39	Yoke End	00-691-701-903	

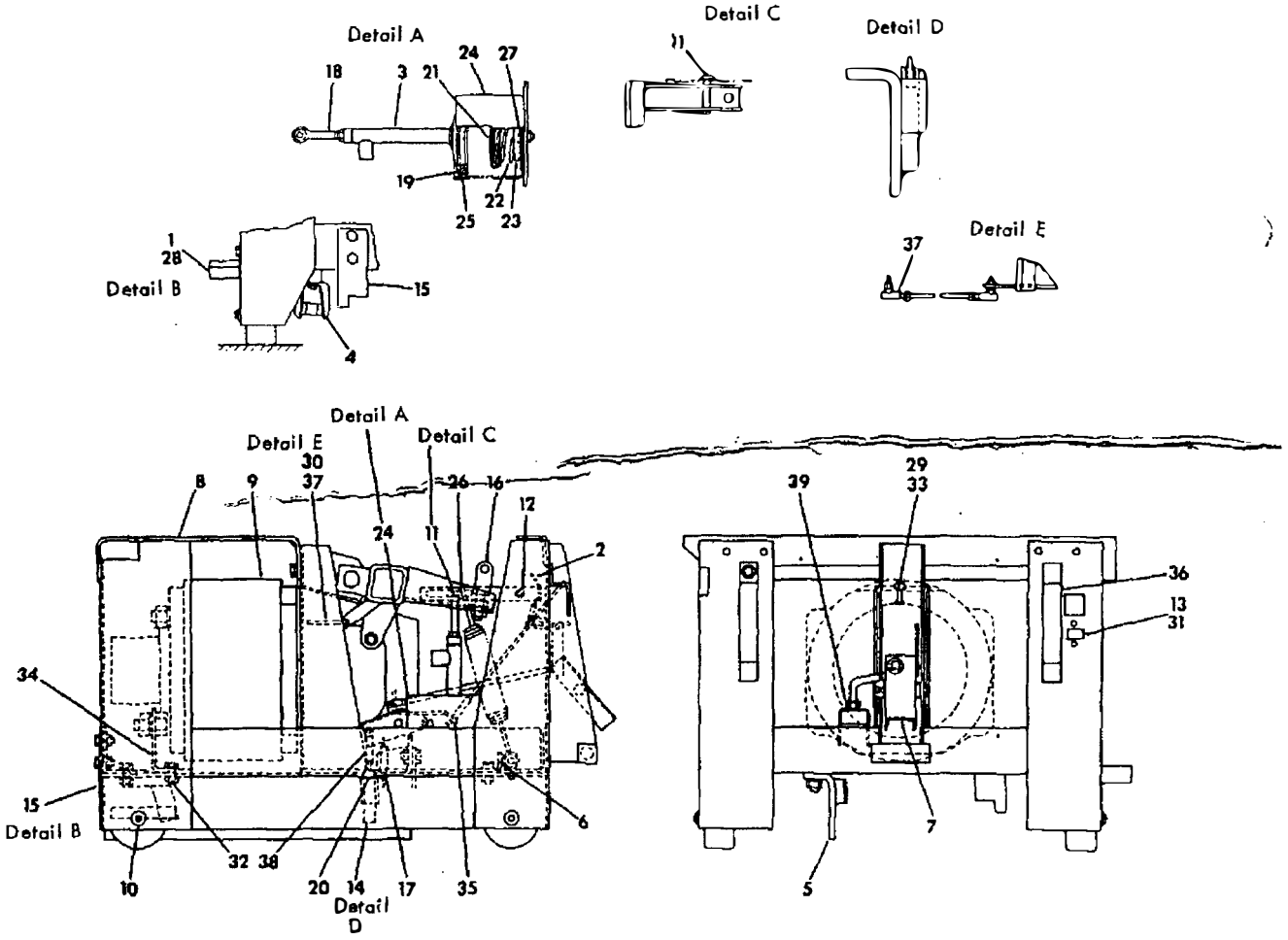

Figure 6. Solenoid Operator and Frame Assembly (Codes E through G; See Code Table, page ii) (72-420-023)

ITEM	DESCRIPTION	PART NUMBER	USAGE
1	Tube	71-114-775-502	
2	Washer	71-024-132-039	
3	Washer	71-140-422-035	
4	Washer	71-140-443-001	
5	Rod	72-120-329-001	
6	Lever	72-120-394-502	
7	Link Assembly	71-101-258-502	
8	Latch Assembly	71-100-264-501	
9	Not Used		
10	Arm Assembly	71-101-269-503	
11	Plate Assembly	71-116-083-501	
12	Cap	71-100-213-001	
13	Screw	71-100-356-001	
14	Pin	71-100-377-001	
15	Pin	71-100-382-002	
16	Pin	71-100-382-001	
17	Pin	71-100-391-001	
18	Pin	71-100-929-005	
19	Washer	71-102-710-001	
20	Shield	71-108-526-001	
21	Shim	71-109-649-001	
22	Shim	71-109-649-002	
23	Stop	71-109-654-001	
24	Spring	71-112-627-001	
25	Latch	71-113-355-001	
26	Link	71-113-413-001	
27	Link	71-113-416-001	
28	Spring	71-113-503-001	

ITEM	DESCRIPTION	PART NUMBER	USAGE
29	Washer	71-100-278-001	
30	Washer	71-115-149-001	
31	Tubing	71-115-973-001	
32	Washer	71-158-647-013	
33	Washer	71-162-014-018	
34	Washer	71-170-538-001	
35	Washer	71-173-732-004	
36	Pin	71-915-161-025	
37	Washer	71-922-850-001	
38	Cam	71-120-007-001	
39	Lever	72-120-189-002	
40	Bracket	72-120-193-001	
41	Pin	72-120-194-002	
42	Bracket	72-120-195-001	
43	Spacer	72-120-198-001	
44	Compression Spring	71-204-606-020	
45	Roller Bearing	15-813-073-001	
46	Needle Bearing	00-813-119-814	
47	Nyliner	00-815-279-010	
48	Stud - Stop	18-657-354-100	
49	Spring	15-837-321-002	
50	Micro Switch	00-871-351-007	
51	Limit Switch	00-871-383-403	
52	Rod	71-107-949-005	
53	Spring	71-140-076-001	
54	Plunger Assembly	71-208-445-501	
55	Frame	71-302-659-501	
56	Arm Assembly	71-302-661-502	
58	Armature	71-113-467-001	
59	Pin	71-164-062-011	

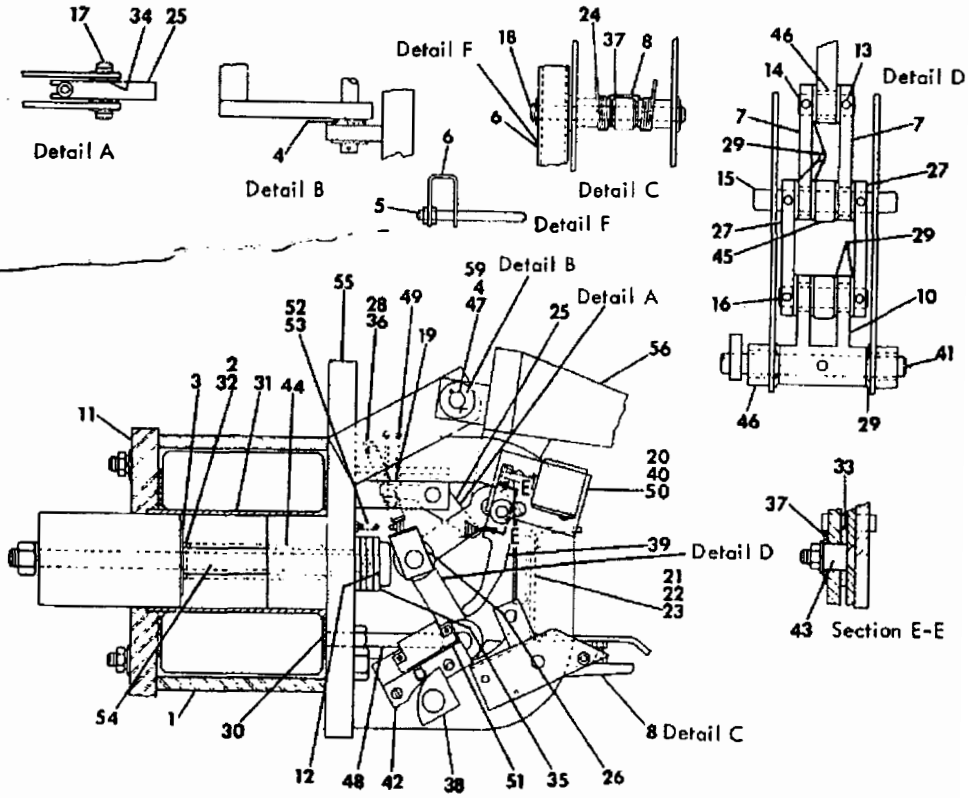

Figure 7. Type FC-500A Solenoid Operator Assembly (72-320-029)
(Codes A through D; See Code Table, page ii)

ITEM	DESCRIPTION	PART NUMBER	USAGE
1	Arm	71-302-796-502	
2	Latch	71-100-264-501	
3	Link Assembly	71-101-258-502	
4	Arm	71-101-269-504	
5	Tube	71-114-775-503	
6	Plunger Assembly	71-208-445-503	
7	Plate	71-209-652-501	
8	Frame	71-302-967-502	
9	Lever	72-120-394-502	
10	Washer	71-024-132-039	
11	Cap	71-100-213-001	
12	Setscrew	71-100-356-001	
13	Pin	71-100-377-001	
14	Pin	71-100-382-001	
15	Pin	71-100-391-001	
16	Pin	71-100-929-005	
17	Washer	71-102-710-001	
18	Rod	71-107-949-005	
19	Shim	71-109-649-001	
20	Shim	71-109-649-002	
21	Stop	71-109-654-001	
22	Washer	71-111-395-001	
23	Spring	71-112-627-001	
24	Latch	71-113-355-001	
25	Link	71-113-413-001	
26	Spring	71-113-503-001	
27	Washer	71-100-278-001	
28	Armature	71-115-218-001	
29	Tube	71-115-973-003	
30	Spring	71-140-076-001	
31	Washer	71-140-422-035	
32	Washer	71-152-809-027	
33	Washer	71-158-647-013	
34	Pin	71-161-921-008	
35	Washer	71-170-538-001	
36	Washer	71-173-732-004	
37	Washer	71-922-850-001	
38	Spring	71-204-606-020	
39	Cam	72-120-007-001	
40	Pin	72-120-194-001	
41	Rod	72-120-329-001	
42	Roller Follower	15-813-073-001	
43	Needle Bearing	00-813-119-814	
44	Nyliner	00-815-279-020	
45	Limit Switch	18-657-372-503	
46	Micro Switch	18-657-372-504	
47	Spring	15-837-321-002	
48	Pin	71-100-382-002	
49	Link	71-113-416-001	

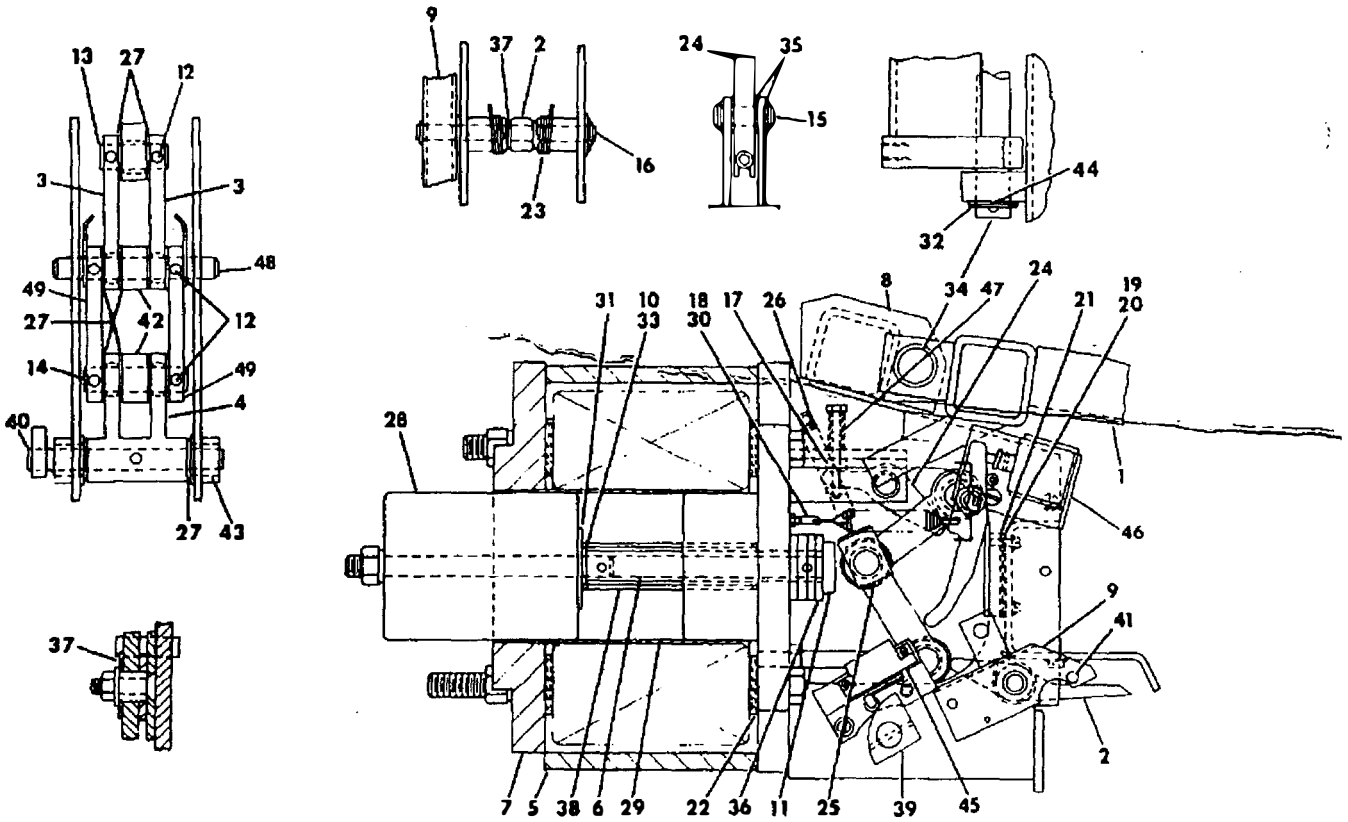

Figure 8. Solenoid Operator Assembly (72-320-036)
(Codes E thru G, See Code Table, page ii)

ITEM	DESCRIPTION	PART NUMBER	USAGE
1	Contact Finger Ass'y.	71-201-738-502	HIJLM
		71-201-458-502	KN
		71-106-079-501	JM
2	Auxiliary Closing Spring	71-209-454-501	LMN
3	Panel Assembly	71-206-907-503	HIJK
		71-206-907-507	LMN
4	Phase Barrier	71-208-415-501	LMN
		71-208-415-502	HIJK
		71-208-415-503	HIJK
5	Arc Chute Assembly	71-401-287-501	HIJK
		71-401-440-503	LMN
6	Label	15-171-083-030	LMN
7	Washer	71-107-100-002	
8	Label	71-108-145-001	
9	Indicator	71-111-259-001	
10	Panel	71-113-398-001	
11	Spring	71-113-600-001	
12	Strap	71-114-302-001	
13	Label	71-117-507-001	
14	Indicator	71-167-932-001	
15	Connector	71-208-263-002	
16	Barrier	71-208-670-004	
17	Channel	72-120-378-001	HIJK
		71-116-681-501	LMN
18	Cover	72-220-077-001	
19	Cover	72-220-077-002	
20	Strap	71-115-568-001	LMN
21	Support	71-115-645-001	LMN
22	Barrier	71-116-679-001	
23	Support	71-302-650-001	HIJK
		71-302-903-001	LMN
43	Shim	71-110-641-003	
44	Shim	71-110-641-004	
45	Washer	71-018-219-020	

ITEM	DESCRIPTION	PART NUMBER	USAGE
24	Block Assembly	18-657-410-597	
25	Block Assembly	18-657-410-598	
26	Label	71-113-871-001	
27	Block	71-117-870-001	
28	Label	71-114-294-001	
29	Basic Breaker Ass'y.	18-466-956-504	H
	(Includes items 30	18-466-956-505	I
	thru 39 below)	18-466-956-506	J
		18-466-956-507	K
		18-466-956-508	L
		18-466-956-509	M
		18-466-956-510	N
30	Frame & Operator	72-420-083-501	HIJK
	(See Figure	72-420-083-502	LMN
31	Link	71-113-440-001	
32	Shim	71-113-679-001	
33	Angle	71-113-680-001	
34	Barrier	71-113-804-001	
35	Barrier	71-113-805-001	
36	Guard	71-118-452-002	
37	Washer	71-164-152-008	
38	Header & Tube	71-208-524-001	
39	Stud & Support	71-401-626-501	H
	(See Figure	71-401-626-503	I
		71-401-626-508	J
		71-401-626-502	K
		71-401-626-506	L
		71-401-626-510	M
		71-401-626-507	N
40	Not Used		
41	Washer	71-019-219-015	
42	Pin	71-164-062-012	

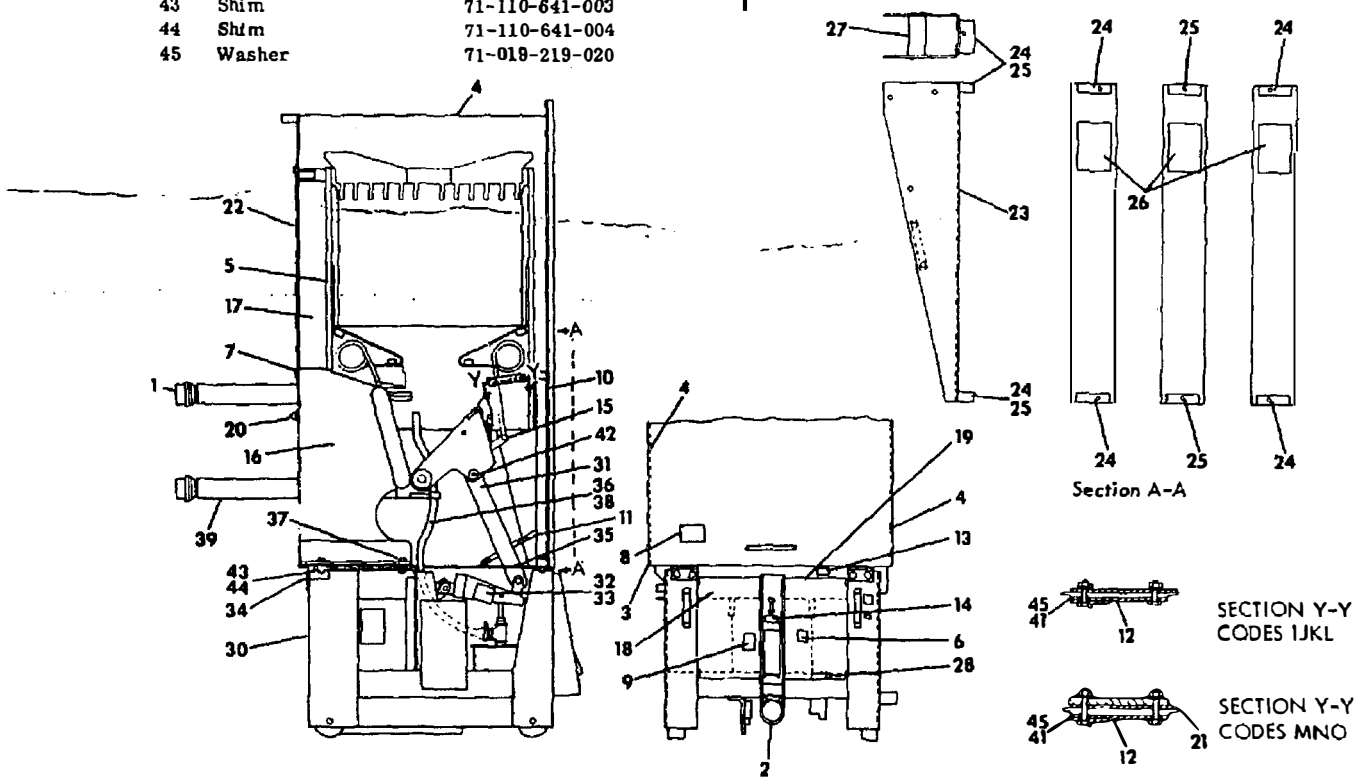

Figure 9. Stored Energy Breaker Assembly (Codes H through N; See Code Table, page ii) (72-422-916) (18-466-956)

ITEM	DESCRIPTION	PART NUMBER	USAGE	ITEM	DESCRIPTION	PART NUMBER	USAGE
1	Operator Assembly	72-420-081-501	HIJK	24	Valve Disc	71-115-244-001	
		72-420-081-502	LMN	25	Ring	71-116-131-001	
2	Guide Assembly	71-113-437-501		26	Compression Spring	71-140-125-001	
3	Indicator Arm Ass'y.	71-113-474-501		27	Angle	71-208-698-001	
4	Piston Assembly	71-114-161-505		28	Washer	71-152-809-002	
5	Guide Assembly	71-114-177-501		29	Rod	72-120-703-001	
6	Ground Contact Ass'y.	71-114-787-502		30	Clevis	72-120-704-001	
7	Crank Assembly	72-120-699-501		31	Roller	72-120-706-001	
8	Pedal Assembly	72-220-080-502		32	Bracket	72-120-708-001	
9	Frame Assembly	72-320-035-502		33	Handle	72-120-391-001	
10	Counter	71-110-940-002		34	Wire Rope	00-573-897-022	
11	Plunger	71-113-442-001		35	Yoke End	00-691-701-901	
12	Stop	71-113-478-001		36	Yoke End	00-691-701-903	
13	Yoke End	71-113-487-002		37	Yoke End	00-691-701-902	
14	Angle	71-113-530-001		38	Roll Pin	00-671-176-377	
15	Rod End	71-113-541-001		39	Wheel	15-171-067-002	
16	Spring	71-113-621-001		40	Spring	15-837-455-002	
17	Rod End	71-113-633-001		41	Oval Sleeve	15-171-054-001	
18	Spring	71-113-669-001		42	Spring	15-837-321-003	
19	Cup	71-114-151-001		43	Plate	71-113-349-001	
20	Compression Spring	71-114-153-001		44	Indicator	71-208-691-501	
21	Bumper	71-114-154-001		45	Rod	71-113-457-002	
22	Cylinder	71-114-155-003		46	Stud	71-113-674-001	
23	Packing	71-114-156-001		47	Roll Pin	00-671-176-224	

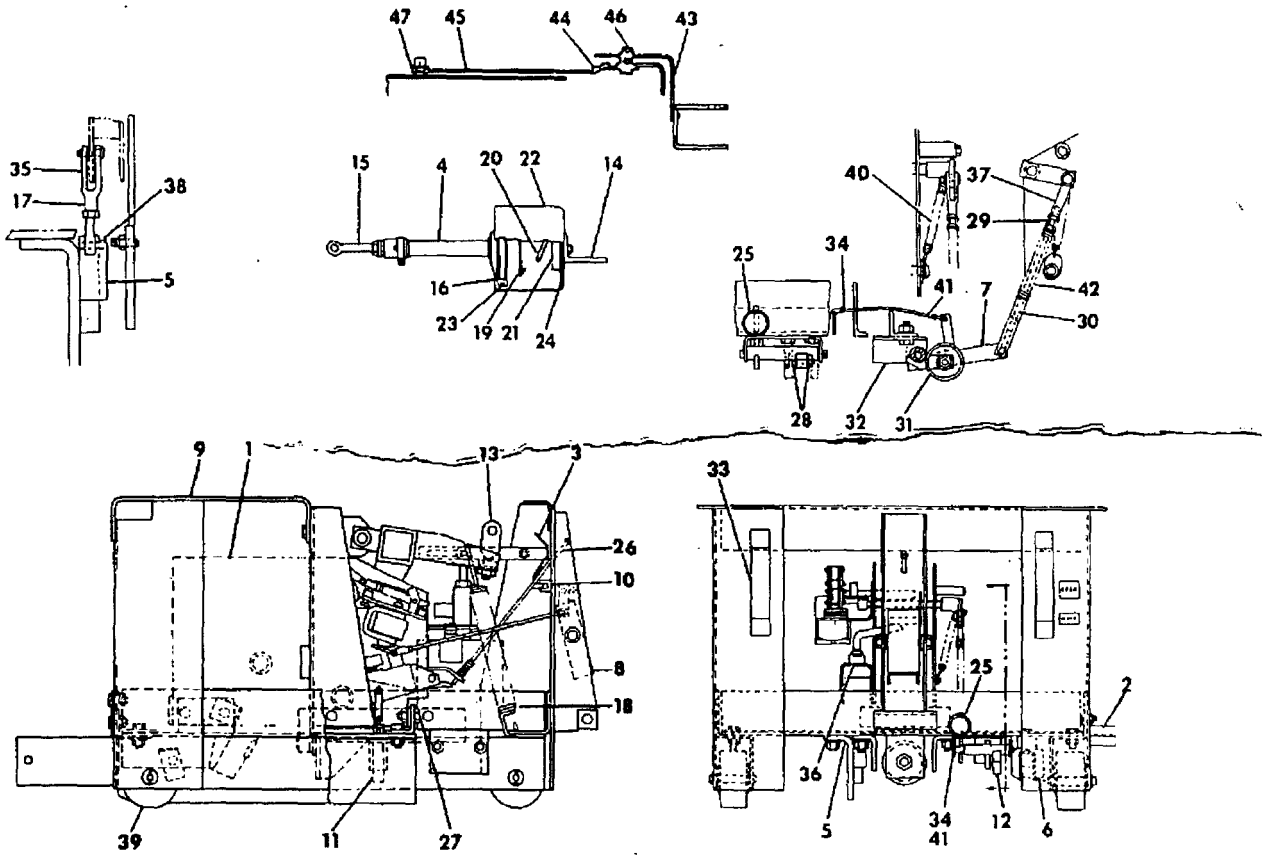

Figure 10. Stored Energy Operator and Frame (Codes H through N; See Code Table, page ii) (72-420-083)

ITEM	DESCRIPTION	PART NUMBER	USAGE
1	Latch Assembly	71-100-264-501	
2	Tube Assembly	71-114-922-501	
3	Pin	71-104-935-020	
4	Link Assembly	71-101-258-503	
5	Link	72-220-133-001	
6	Rod End	71-106-245-009	LMN
7	Spring	71-115-558-001	
8	Spring	71-115-559-001	
9	Rod End Assembly	71-114-035-501	
10	Spring	71-115-560-001	
11	Stop Assembly	71-116-177-502	
12	Spring	71-115-561-001	
13	Frame Assembly	71-401-398-503	
14	Arm Assembly	18-718-952-502	
15	Arm Assembly	72-120-445-501	
16	Crank Assembly	72-120-697-502	
17	Lever Assembly	72-120-568-502	
18	Bumper Plate Ass'y.	71-120-152-501	
19	Switch Assembly	18-657-372-511	
20	Pin	71-018-299-001	
21	Key	71-018-485-007	
22	Pin	71-100-377-001	
23	Washer	71-101-009-001	
24	Pin	72-120-723-001	
25	Link	71-113-416-001	
26	Pin	71-114-019-002	
27	Pin	71-114-044-002	
28	Pin	72-120-434-001	
29	Latch Assembly	72-120-486-501	
30	Crank	72-120-724-001	
31	Bracket	71-114-924-001	
32	Bracket	71-114-924-002	
33	Pin	71-114-949-001	
34	Tubing	71-115-330-005	
35	Spacer	71-116-015-003	
36	Lock Assembly	72-220-134-502	
37	Spring	71-116-218-001	
38	Pin	71-116-484-001	
39	Arm	71-116-793-001	
40	Shim	71-116-807-001	
41	Pin	71-118-093-001	
42	Washer	71-140-422-002	
43	Washer	71-140-422-038	
44	Washer	71-152-809-025	
45	Washer	71-152-809-027	
46	Pin	71-161-921-004	
47	Washer	71-170-127-001	
48	Tubing	71-172-303-008	
49	Washer	71-921-604-005	
50	Washer	71-922-850-001	
51	Gear Assembly	71-210-046-016	
52	Pin	72-120-041-001	
53	Bumper	72-120-113-001	
54	Link	72-120-114-001	
55	Screw	72-120-137-001	
56	Spacer	72-120-138-001	
57	Spacer	72-120-139-001	
58	Bar	72-120-140-001	
59	Spacer	72-120-179-001	
60	Rod	72-120-329-001	
61	Shaft	72-120-442-001	
62	Washer	71-152-809-033	
63	Arm	72-120-399-001	
64	Washer	71-171-059-001	
65	Spacer	72-110-390-009	
66	Crank	72-120-710-001	
67	Torsion Spring	71-114-133-001	
68	Washer	71-024-132-044	
69	Spring	00-837-455-012	
70	Link	72-120-709-001	
71	Bracket	72-120-086-001	
72	Spring	00-837-455-012	
73	Switch	15-171-044-004	
74	Needle Bearing	00-813-119-814	
75	Arm Assembly	71-302-796-502	
76	Spacer	72-120-061-001	
77	Cam	71-118-392-001	
78	Link	72-120-087-001	
79	Spring	71-113-503-001	
80	Screw	72-120-141-001	
81	Shim	71-105-138-001	
82	Spacer	71-114-951-002	
83	Round	71-104-107-016	
84	Cam	72-220-044-001	LMN
		71-210-343-001	HIJK
85	Arm Assembly	72-120-088-001	
86	Roller Follower	15-813-073-001	
87	Roller Follower	15-813-073-002	
88	Bearing	00-815-021-101	
89	Nyliner Flange	00-815-279-020	
90	Washer	71-100-278-001	
91	Link Assembly	71-115-913-502	
92	Pin	71-100-382-001	
93	Screw	71-100-356-001	

Figure 11. Stored Energy Operator Assembly (Codes H through N; See Code Table, page ii) (Sheet 1 of 2) (72-420-081)

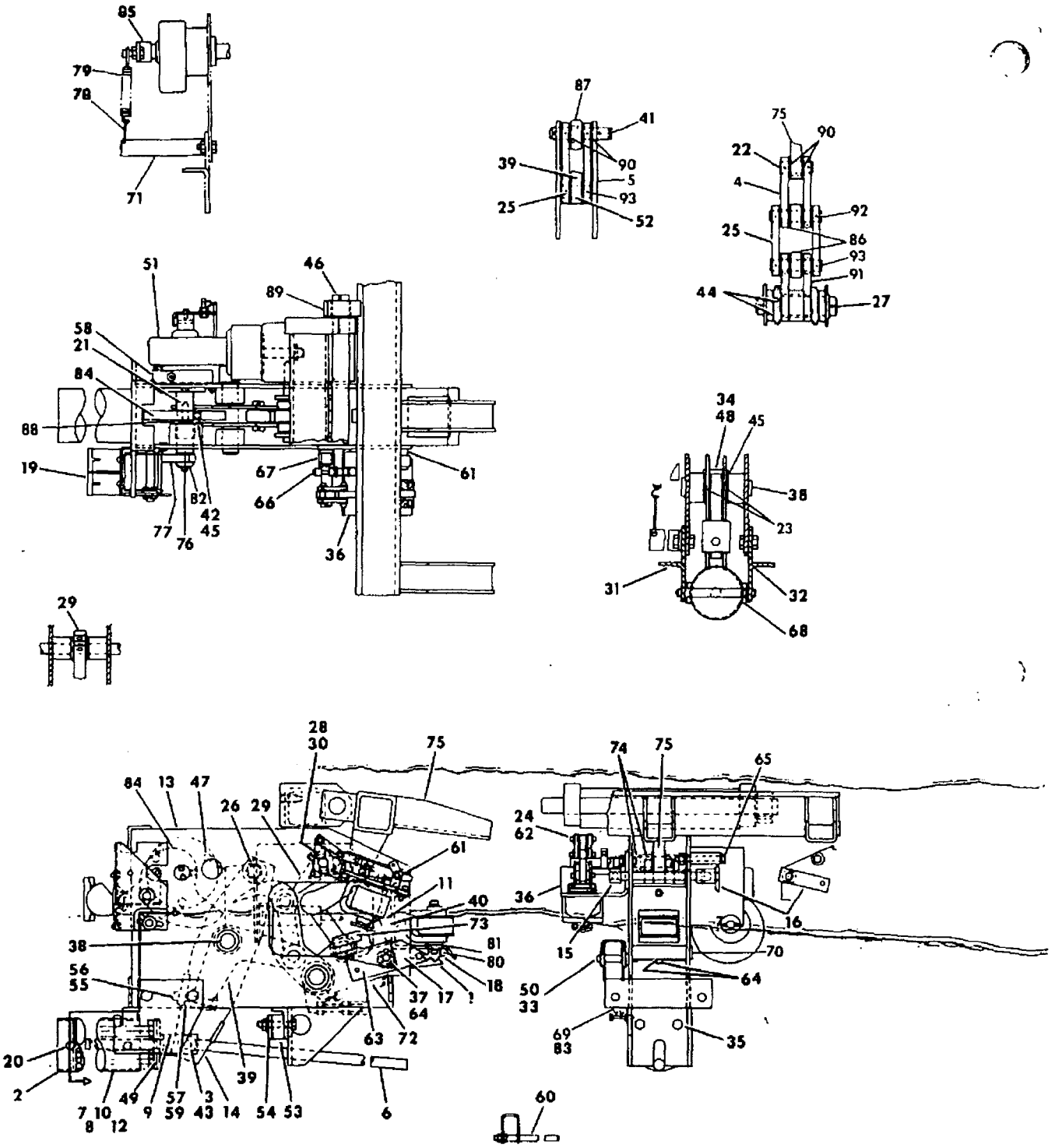

Figure 11. Stored Energy Operator Assembly (Codes H through N; See Code Table, page ii) (Sheet 2 of 2)