Ground Fault Protection

GADP Ground Fault Indication System

Instruction Manual

GARD

7615 Kimbel Street,
Mississauga,
Ontario Canada L5S 1A8
Tel: (905)673-1553
Fax: (905)673-8472
Toll Free: 1-888-RESISTR 737-4787
www.i-gard.com

TABLE OF CONTENTS

1. INTRODUCTION: 1

2. APPLICATION: 1
   - 2.1 3 Phase, 3 Wire Delta Connected System Components. 1
   - 2.2 Artificial Neutrals 1
   - 2.3 Neutral Grounding Resistors 2
   - 2.4 Alarm Resistor Unit DDR2 3

3. REFERENCES 3

4. SPECIFICATIONS 4
   - 4.1 Power Requirements: 120V, 50/60 Hz, 50VA 4
   - 4.2 Maximum Ratings: 4
   - 4.3 Dielectric: 4
   - 4.4. Remote Alarm Relay Contacts: 4
   - 4.5 Pick-up Settings: 4
   - 4.6 Alarm Time Delay: 4
   - 4.7 Meter Range: 0 to 100% of system let-through current 4
   - 4.8 Accuracy: 4
   - 4.9 Temperature Range:0°C to 65°C 4
   - 4.10. Dimensions: 4

5. DESCRIPTION: 5
   - 5.1 Frame (GADP-MF2) 5
   - 5.2 Main Module (GADP-CM2) 5
   - 5.3 Pulse Module (DS-PM) 6

6. SHIPMENT: 6

7. INSTALLATION: 7

8. CONNECTIONS: 7

10. MAINTENANCE AND TROUBLESHOOTING: 9
    - 10.1 Preventative Maintenance 9
    - 10.2 Troubleshooting 9

11. TESTING THE GADP: 11

12. REPAIR AND RECALIBRATION 12

13. SPARE PARTS: 12

14. APPENDIX: 13

TABLE OF FIGURES

Figure 1 Dimensional Details GADP **14**

Figure 2 Typical Wiring schematic for GADP with delta system shown **15**

Figure 3 Connection Diagram for GAPD **16**

Figure 4 Typical Test Fault Resistor **16**

LIST OF TABLES

Table 2 I-Gard Resistors Artificial Neutral Units **2**

Table 3 Pulsing Ground Resistors for GADP **3**

Table 4 Alarm Resistor Units **3**

Table 5 Shipping Information **6**

GADP Fault Location Module

1. INTRODUCTION:

The I-Gard GADP is a modular, Ground Alarm Indicator unit designed specifically for Ground Fault Indication and location, on Wye or Delta-connected, three-phase, three-wire, High Resistance-Grounded power systems. It may be used on systems up to any voltage with the use of 120V PTs.

An I-Gard Alarm Resistor unit (DDR2) is used to provide the GADP with a means to monitor the power system voltages to ground. This information is utilized by the GADP to determine and confirm whether a ground fault exists somewhere in the distribution system. This same information is also used to detect the occurrence of blown fuses that protect the phase lines connected to the Alarm Resistor unit itself.

The GADP is designed to provide an alarm when a single ground fault occurs on a resistance grounded system, and to indicate on which phase, the fault occurred. Means is also provided to locate the fault with a pulsing circuit that can be energized to provide pulsating current in the fault so that the fault can be traced using a simple, flexible-core clamp-on probe. For this purpose it is necessary to have a grounding resistor installed which provides a safe level of current which can be modulated by the pulsing system.

When a second fault, on another phase, is incurred by the distribution system, the only limitations on the amount of ground current are the impedances of the faults and the ground circuit between them. Under this condition, extensive damage can occur, making it necessary to clear the first fault as soon as possible.

The prime advantage, then, of using the GADP GROUND ALARM INDICATOR unit, is that the user is given early warning of ground faults allowing time to locate and clear the fault to assure maximum service continuity.

2. APPLICATION:

The standard GADP GROUND ALARM INDICATOR unit is used in conjunction with the following, appropriately rated, auxiliary components.

The following tables list those components.

2.1 3 Phase, 3 Wire Delta Connected System Components.

For delta systems an artificial neutral transformer arrangement will be necessary to provide a convenient star-point for the grounding Resistor. The Resistor will be connected between this point and Ground to create the current limiting circuit.

Note: *If Pulse operation is such as to double normal fault current, then the artificial neutral must be capable of taking this extra current. This generally means that the artificial neutral transformer must be rated at twice the continuous fault current as defined by the grounding resistor under steady state fault conditions. For example if the current rating of the resistor is 5A, then a 10A artificial neutral transformer would be necessary to pulse up to 10A. The OHMNI-PM series resistors do not require double current rated artificial neutrals since they pulse to a lower current when pulsing is invoked.*

2.2 Artificial Neutrals

I-Gard provides artificial neutrals in the form of zig-zag transformers for various voltages, as standard units. See Table 1. For systems with voltages in excess of 4160V it is usually more convenient to use a broken-delta transformer arrangement and close the secondary delta with a current limiting Resistor. See Application Guide for Ungrounded and High-Resistance Grounded Systems C-400E for more details or call I-Gard.

Continuous Current Rating (Amps)	System Line to Line Voltage (Volts)	Catalogue No.
1	480	DDAI-1004*
2	480	DDAI-2004*
5	480	DDAI-5004
1	600	DDAI-1006*
2	600	DDAI-2006*
5	600	DDAI-5006
2	2400	DDAI-2024
5	2400	DDAI-5024
10	2400	DDAI-10024
2	4160	DDAI-2040
5	4160	DDAI-5040
10	4160	DDAI-10040

Table 1 I-Gard Resistors Artificial Neutral Units

2.3. Neutral Grounding Resistors

A special Grounding Resistor Type OHMNI-PM is recommended for the GADP operation to allow the Pulse Module to pulse the Ground Current. This is made possible when a Pulse Module in the GADP is connected to a Solid State switch in the OHMNI-PM. The Pulse Module (DS-PM) provides a current pulse from its output terminals from a 12V dc pulse, with a variable pulse rate. This current controls the Solid State Switch which in turn switches an auxiliary resistor into the Ground Resistor path causing the Ground current to be reduced on the positive half cycle of the pulse. The result is a Ground Current that is pulsating from high to low, which a hand-held current probe wrapped around all conductors of a faulted circuit can readily detect.

The standard Neutral Grounding Resistors available are rated as per Table 2 below.

Catalog Number	System Voltage	I_G HI/LO (with 100%fault)
OHMNI-4PM-01	480V	1/0.5A
OHMNI-4PM-02		2/1A
OHMNI-4PM-05		5/2.5A
OHMNI-4PM-10		10/5A
OHMNI-6PM-01	600V	1/0.5A
OHMNI-6PM-02		2/1A
OHMNI-6PM-05		5/2.5A

OHMNI-6PM-10		10/5A

Table 2 Pulsing Ground Resistors for GADP

2.4 Alarm Resistor Unit DDR2

The GADP must also be used with a voltage divider resistance device or Alarm Resistor Unit Type DDR2. This device matches the GADP to the system, and reduces the Line to Ground voltage levels from system voltage to electronic levels. Furthermore, this allows the GADP to determine which phase is faulted and the level of the fault on the system. The bar graph meter derives its indication directly from the DDR2 N-Ground voltage level, without any need to have a connection to the Grounding Resistor at all. Table 3 indicates the DDR2 types available.

Catalogue No.	System Voltage
DDR2-4	480V
DDR2-6	600V
DDR2-2	240V
DDR2-1	120V + Used on system voltages over 600V by connecting to P.T.'s with 120V secondaries

Table 3 Alarm Resistor Units

3. REFERENCES

For further information regarding all of the above components, refer to the following I-Gard manuals: -

Application Guide - Ungrounded Systems	C-400E
Instruction Manual Type DDAI Artificial Neutrals	C-430EM
Instruction Type DDR2 Alarm Resistor Units	C-440EM
Instruction Type NGR Neutral Grounding Resistors	C-450EM
Instruction Manual DS-PM Pulse Card	C-412EM

4. SPECIFICATIONS

4.1 Power Requirements: **120V, 50/60 Hz, 50VA**

4.2 Maximum Ratings:

Control Voltage		104-132V
Input Voltage	A, B and C to G	240 rms
	N to G	240 rms

4.3 Dielectric:

a) Relay contacts to chassis: 1500 Vrms for a min or 1800 Vrms for a sec.
b) Control terminals to chassis: 1500 Vrms for a min or 1800 Vrms for a sec.

Note: Do not hi-pot test the unit. Refer to section 10 for details.

4.4. Remote Alarm Relay Contacts:

SPDT dry contacts 8 amperes resistive, 5 amperes inductive at 120/240 VAC
8 amperes resistive, 5 amperes inductive at 24 VDC

4.5 Pick-up Settings:

Main Module Alarm: 50% of system Ground current

4.6 Alarm Time Delay:

Main Module .5 seconds minimum

4.7 Meter Range: **0 to 100% of system let-through current**

4.8 Accuracy:

Alarm Pick-up: ±10% of system let-through current
Meter: ±10% of system let-through current
Repeatability: ±2%

4.9 Temperature Range: **0°C to 65°C**

4.10. Dimensions:

See Figure 1 in Appendix 1

I-GARD RESERVES THE RIGHT TO CHANGE SPECIFICATION OF ITS PRODUCTS WITHOUT NOTICE

5. DESCRIPTION:

The GADP Ground Alarm Indicator Unit is designed as a plug-in modular enclosure. This arrangement provides convenient draw-out serviceability. A Main Module and Pulsing Module are plugged into these racks to provide system monitoring, far beyond the minimum required by Code.

Each enclosure is suitable for flush mounting in switchgear control compartment doors or other convenient panel space.

For long life and resistance to vibration damage, all lamps, meter and digital displays are light-emitting diodes (LEDS).

5.1 Frame (GADP-MF2)

This component is 8" (205 mm) wide with three edge-connector slots for the Main Module GADP-CM2 and the Pulse Module DS-PM.

At the back of the GADP-MF2 there are marked connection terminals. For user connections refer to Figures 2 and 3 in the Appendix. The GADP-CM2 module can only fit in the left-hand position. The DS-PM can be installed on the right hand slot only.

The expansion connector, accessible through a slot on the left-hand side panel is reserved for future use.

For the GADP-MF2 outline dimensions, refer to Fig. 1 in the Appendix.

5.2 Main Module (GADP-CM2)

This component can only be inserted into the two extreme left-hand slots of the Main Frame.

Contained in this module is the power supply section (including transformer), which provides the AC and DC voltages, required to operate the GADP unit.

For remote alarm indication a SPDT (Form C) relay is provided and wired out to rear terminals. A time delay of 0.5sec is incorporated to prevent undesired momentary alarm indications.

Main alarm detection and indicator circuits are located in this module. Three red phase lamps (A, B and C) are available on the module's faceplate for indicating whether any phase has incurred a ground or blown fuse fault. An amber lamp (BLOWN FUSE) serves as a blown fuse alarm indicator. A green lamp (NORMAL) is also provided to indicate when the complete GADP system is functioning under normal conditions.

A 10-segment LED bar graph display is incorporated into this module to serve as both the principal local alarm indicator and a meter scale.

Two push-button switches are located on the front face of this module. One push-button switch (ALARM SILENCE) provides the means to silence the remote alarm circuit. The other (RESET) provides a reset for the faulted phase indication, as well as energizing the meter function to display the total system Ground current I_G at the time, when depressed.

***Note**: the 4-position DIPswitch SW1 on the circuit board 155-112B is not used in GAPD units.*

5.3 Pulse Module (DS-PM)

The DS-PM can only be inserted into the right hand location in the unit. This module contains a microprocessor pulsing circuit for fault location. It can be configured in different ways depending on the desired mode of operation.

A four-position DIPswitch allows the use of NORMAL or INVERTED operation. This allows two modes: -

1) NORMAL – In non-pulse condition no current is output to SS switch. Then, when Pulsing Starts current is output with positive current on positive half-cycle of square wave output.
2) INVERTED – In non-pulse condition current is output continuously to SS switch. Then, when pulsing current is output on negative half-cycle of square wave output. This allows Pulse up current (e.g. 5A to 10A) in case a) and Pulse down current (e.g. 5A to 2.5A) in case b).

6. SHIPMENT:

Each GADP is carefully inspected before being packed in specially designed containers. The following table lists the components by catalog number The GADP is shipped as a single carton. Other associated devices that may be ordered are included below.

COMPONENT
GADP-MF (Main Frame)
GADP-CM2 (Main Module)
Pulse Module
OHMNI-PM (Pulsing Ground Resistor)
DDR2 (Alarm Resistor Unit)
DDAI (Artificial Neutral)
TS-SENSOR (Flexible core probe)

Table 4 Shipping Information

Every unit should be examined immediately upon receipt. If damage or indication of rough handing is apparent, a claim should be filed without delay with the transport company. I-Gard should also be notified promptly if replacements for damaged goods are necessary. If units received are not to be installed immediately, they should be stored in their original containers in an area free of dirt and moisture.

7. INSTALLATION:

The GADP will normally be mounted in the main distribution switchgear where ready access can be gained to signal wires, switching device control lines and a power source from which to operate. The enclosure should be flush mounted in either a compartment door or in a fixed surface that facilitates easy access to the back of either unit for viewing and operation.

⚠ CAUTION
Hazard of Electrostatic Damage
Care should be taken when handling the Plug-In Modules to ensure that they are not damaged by static electricity. The use of grounded wrist straps or foot straps is recommended, particularly in conditions of low humidity and where synthetic materials such as plastics, nylon etc are allowed to contact the circuit boards or any ungrounded persons handling them. .
Failure to observe these precautions may result in permanent damage to the modules.

8. CONNECTIONS:

8.4 It is recommended that the GADP be connected to the properly selected I-Gard Artificial Neutrals or Neutral Grounding resistors listed in Section 2. It can be used with other types of high resistance grounding but in any case, an Alarm Resistor unit (DDR2) and ZSCS current sensors must be used to provide phase voltage and ground fault current information, respectively.

8.4 All user connections are to be made to the rear terminal blocks of the GADP-MF2 or GADP-EF and shall be made with 14 AWG switchboard type wire.

8.4 Phase voltage information is brought to the Main Module by connecting the A, B, C and N terminals of the GADP-MF2 to the identically labelled terminals in the DDR2 Alarm Resistor unit. The ground connection in the Alarm Resistor is to be taken to the user supplied terminal block (noted above) to provide a single point ground connection. The ground should be reliable and use of the door or chassis is not generally recommended. The installer should check that all connections are secure.

8.4 Care should be taken not to exceed the Alarm relay dry contact rating of 8 Amperes, 120/240V AC or 24V DC (Resistive). When connecting remote alarm annunciation circuits an external power source must be used.

8.5 Detailed user connection diagrams, Figures 2 and 3, can be found in the Appendix.

9. OPERATION:

9.1 When a ground fault occurs on a high resistance ground system, the GADP unit is designed to detect it, provide an alarm, and display the phase, on which it is located.

9.2 The unit also detects, provides an alarm, and shows which phase of the Alarm Resistor unit connections has a blown fuse. Ground fault current is also monitored by the DDR2 also which provides a voltage proportional to that across the grounding resistor, but without direct connection to the grounding resistor.

9.3 The Main Module simultaneously monitors the phase-to-ground voltages and the voltage developed across a resistor from the DDR2 starpoint to ground. It will detect and show an alarm condition (after 0.5 seconds) during a single ground fault when:

1) One phase to ground voltage goes to below 50% of its nominal rated voltage;

2) The other two phase to ground voltages rise above 30% of their nominal rated value, and

3) The signal developed across a resistor from the star-point to ground in the DDR2 Alarm Resistor unit rises to a preset level when the power system is experiencing a ground fault equivalent to 50% of the NGR let-through current.

9.4 Phase indication, when it occurs, is a latched function, which can only be cleared by pressing the RESET pushbutton switch on the Main Module. The main Alarm, comprised of the bar indicator and the Alarm relay, and Blown Fuse indication are self-resetting when the fault disappears.

9.5 The Blown Fuse circuit is meant to provide an alarm indication when a fuse protecting the Alarm Resistor unit blows. This circuit also controls the remote alarm relay. If a fuse blows before or after a ground fault on the same phase is detected, the faulted phase indicator will begin to flash. However, the blown fuse should always be replaced and the GADP reset to obtain an unambiguous indication of the ground fault condition.

9.6 The ALARM/METER bar type display, located on the Main Module, has a dual function. If the ground current on the power system exceeds 50% of the NGR let-through current, an alarm situation exists and all 10-segments (100%) of the bar will automatically light, to indicate an alarm condition. The bar display also functions as a meter scale, with a full-scale deflection of 100%, referenced to the particular Artificial Neutral or NGR let-through current being used. The approximate ground current can be displayed on this scale by pressing the RESET pushbutton switch for the total system ground current. The seriousness of the fault can be determined from the meter indication (60% is a high resistance fault, 100% a solid ground on one phase

9.7 Once the GADP unit detects a ground fault or a blown fuse condition and goes into alarm, it may be desired that the remote annunciation be silenced. The ALARM SILENCE switch on the Main Module provides this facility. However, the alarm cannot be silenced unless the GADP is already in Alarm. Pressing the RESET switch can restore the remote alarm.

10. MAINTENANCE AND TROUBLESHOOTING:

The major advantage of ungrounded or high resistance grounded systems is their ability to provide service continuity with a ground fault on one phase. A single phase fault to ground does not cause high currents to flow in the ground circuit; however, the voltage to ground of the two unfaulted phases rises by 73%, stressing the insulation of the power system components. It is common practice to run a faulted system until it is convenient to shut it down for repairs.

The proper operation of the GADP Ground Alarm Indicator unit is therefore very important in order that a fault may be located and corrective maintenance performed. It is recommended that the unit be periodically tested. (Refer to section 10 for instructions.)

10.1 Preventative Maintenance

Every effort has been made during the design and manufacture of the GADP components to ensure the reliability of the whole system. Critical components are tested before insertion and the completed subassemblies are subjected to a variety of inspections and tests before shipping. The only maintenance recommended is the periodic verification that the various modules are functioning (refer to sections 10.1 and 10.2 for test procedure). This may be supplemented by an occasional leakage current check.

10.2 Troubleshooting

The Ground Alarm Indicator unit components undergo extensive tests before shipment, but occasionally, problems and damage can occur in the field. However, most problems arise from external conditions and incorrect connections in the installation stage.

Provided in the following is a list of trouble that could be encountered. If after troubleshooting, the problem cannot be traced or replacement units are required, contact your nearest I-Gard representative or I-Gard factory service.

⚠ DANGER
Hazard of Electrical Shock, Burn or Explosion
All installation, servicing and testing referred to in this manual must be performed by qualified personnel. All power should be disconnected prior to removing covers or enclosures and where live conductors may otherwise be exposed.
Failure to observe these precautions will result in death or severe personal injury.

10.2.1 No Indications on GADP

1. Check that 120 volts AC control power is present at the appropriate rear terminals of the GADP-MF2.

2. Check that the GADP-CM2 module is securely inserted in its proper location.

10.2.2 Blown Fuse Alarm

Check fuses protecting the DDR2 Alarm Resistor unit. If any are blown, replace them.

⚠ DANGER
Hazard of Electrical Shock, Burn or Explosion
Before installing new fuses be certain that the cause of the blown fuse has been corrected. Installation of a fuse in the presence of a short circuit can be extremely hazardous to the installer!
Failure to observe these precautions may result in severe personal injury.

10.2.3 Alarm with no apparent fault

1. Check that this fault is valid by pressing and holding the RESET switch on the Main Module. If the fault is valid, the meter indication should be 50% or above.
2. Check for ***equal*** voltages between A and G, B and G and C and G on the outputs of the DDR2 to the GADP Mainframe (Can be done at the GADP inputs also) of 2 to 3 Volts under normal conditions. Voltage from N to G should be zero.
3. If a fault cannot be found, continue to monitor the situation, since faults can be intermittent.

10.2.3 Phase Indication without Alarm present

Fault has been cleared, either when a machine or service has been shut off, or fault was intermittent in the first place.

10.2.4 All three Phase lamps flashing

Fault has occurred on the dc side of a rectifier such as may be used in VFD, UPS or welder equipment.

10.2.5 Pulse Cannot be found

When fault location cannot detect a pulse it may be due to the following reasons:-

a) Pulse card fuse has blown or missing.

b) Fault is at an upstream location such as transformer, duct or switchgear where probe cannot be used conveniently.
c) Probe battery is dead.
d) Probe is set for dc instead of ac measurement.
e) Fault has been cleared e.g. switching off a machine or service

Refer to Pulse Card Manual C-412EM for further details on fault location.

11. TESTING THE GADP:

Field-testing should be carried out to maintain a routine check on the operation of the Feeder and Main Modules prior to any necessary repairs or recalibration.

WARNING

Dielectric Test Hazard

Do not Hi-Pot Test the GADP connection terminals. These units are subjected to this class of testing in the factory prior to shipping. If absolutely necessary, remove all modules from the frames to be tested and Hi-Pot all, except the `G' terminal from terminal to chassis. The test voltage must not exceed 1,500 volts (AC rms) for 1 minute or 1,800 volts (AC rms) for 1 second.

Failure to observe these precautions may result in permanent damage

DANGER

Hazard of Electrical Shock, Burn or Explosion

All installation, servicing and testing referred to in this manual must be performed by qualified personnel. All power should be disconnected prior to removing covers or enclosures and where live conductors may otherwise be exposed.

Failure to observe these precautions will result in death or severe personal injury.

The alarm measurement and indicating functions of the GADP modules can be checked in the field

To perform such testing, follow the procedure detailed below.

11.1. The simplest way to test the GADP is to apply a test fault to the system in a controlled manner. For this test a Test fault should be constructed from a power resistor as shown in Figure 4. Note all components should be rated for the voltage and power required. The power rating of the resistor particularly should be observed. $P = I^2R$ watts where I is the continuous current in amperes and R is the resistance of the resistor in Ohms.

11.2. The test fault should be connected at a safe location such as a disconnect that can be switched on and off away from people or any hazardous materials.

11.3 Connect the fault to phase A on the system and close the disconnect. Switch on the test fault switch and verify that A Phase lamp flashes on the GAPD. Alarm bar should light up all 10 bars, and NORMAL lamp should go OFF. The alarm horn should energize if connected. Check ALARM contacts for continuity if applicable.

11.4 While in Alarm, check that the SILENCE operates correctly.\

11.5 Switch Pulse Module START button. Connect TS-SENSOR probe around one of the fault conductors and verify that a visible pulse is obtained on the probe meter indicator.

11.6 Switch off the disconnect and remove all test connections after testing.

12. REPAIR AND RECALIBRATION

If any of the previous test results suggest that a particular module should be recalibrated or replaced, contact your I-Gard representative or I-Gard customer service to arrange return. For your protection, please do not return any material without proper authorization.

It should be noted that any attempt by the user to replace or recalibrate any component during the warranty period, automatically invalidates the warranty.

13. SPARE PARTS:

Due to its modular nature, no spare parts are being supplied for the GADP. Complete subassemblies, however, can be ordered as replacement units.

14. APPENDIX:

The following is a list of drawings found in the appendix.

FIG. 1	Dimensional details for GADP
FIG. 2	Typical Wiring schematic for GADP
FIG. 3	Connection Diagram for GADP
FIG. 4	Typical Test Fault Schematic

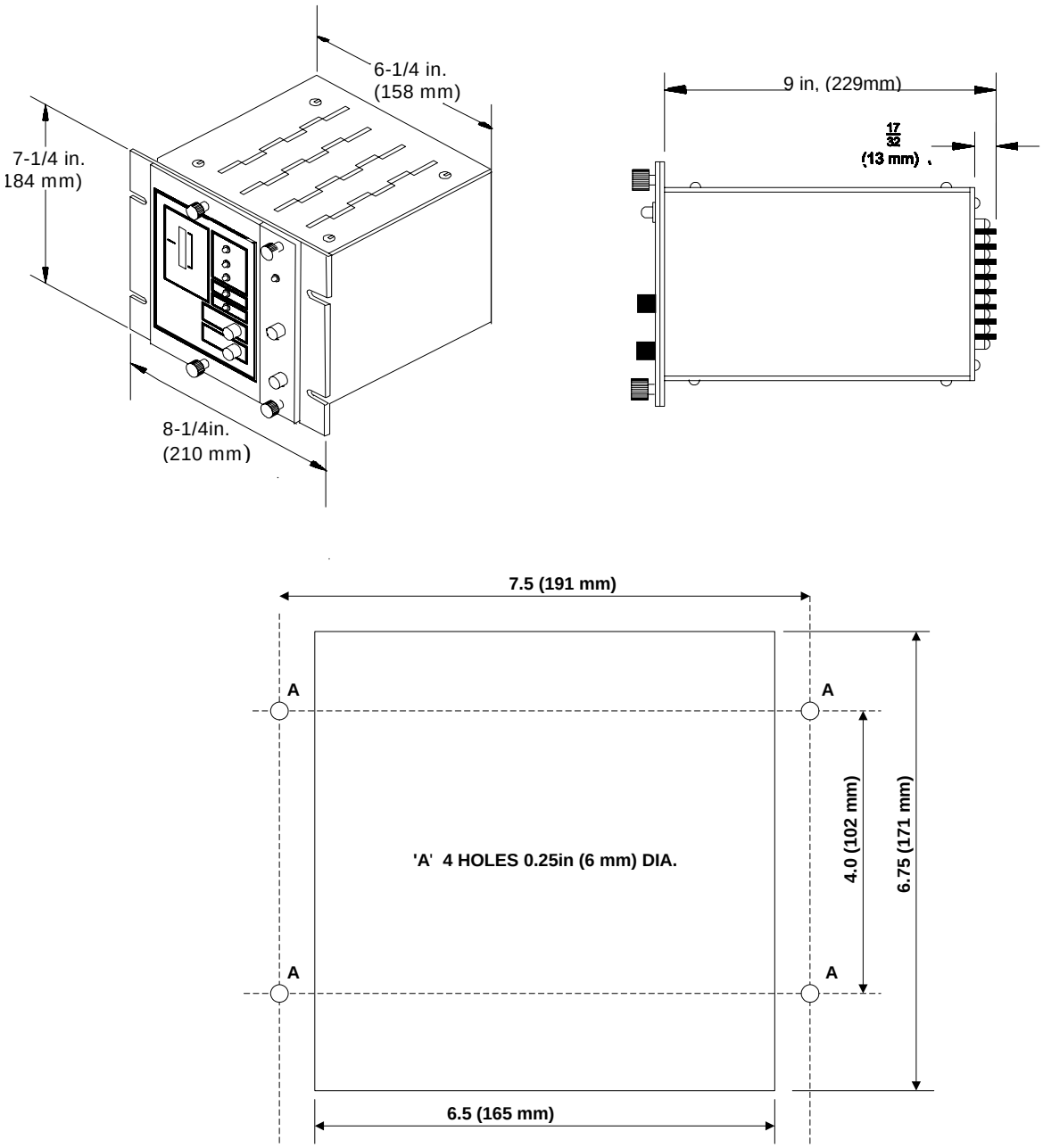

Figure 1 Dimensional Details GADP

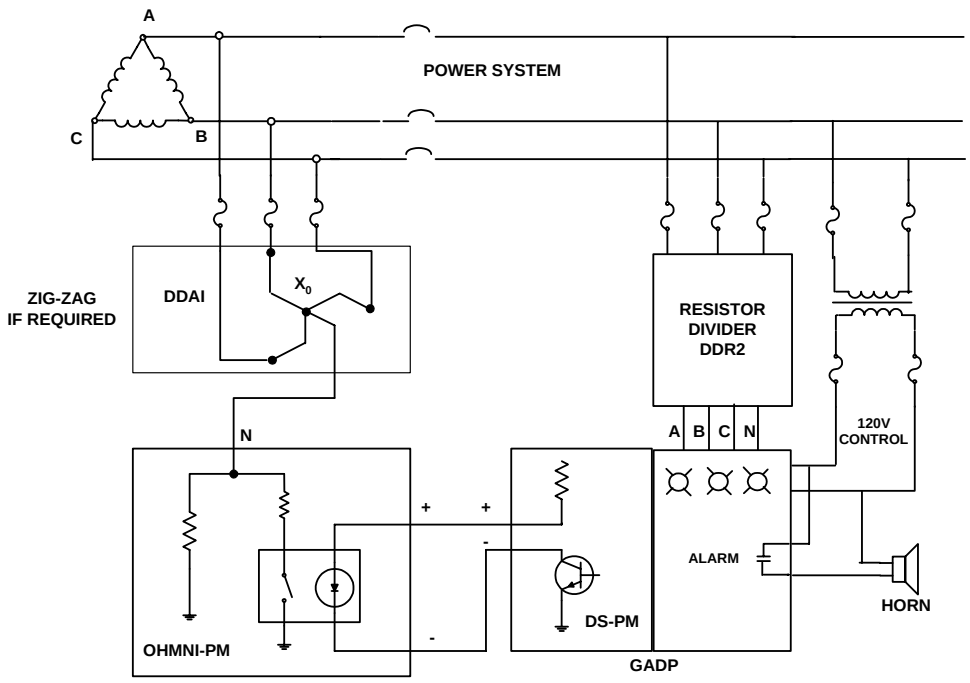

Figure 2 Typical Wiring schematic for GADP with delta system shown

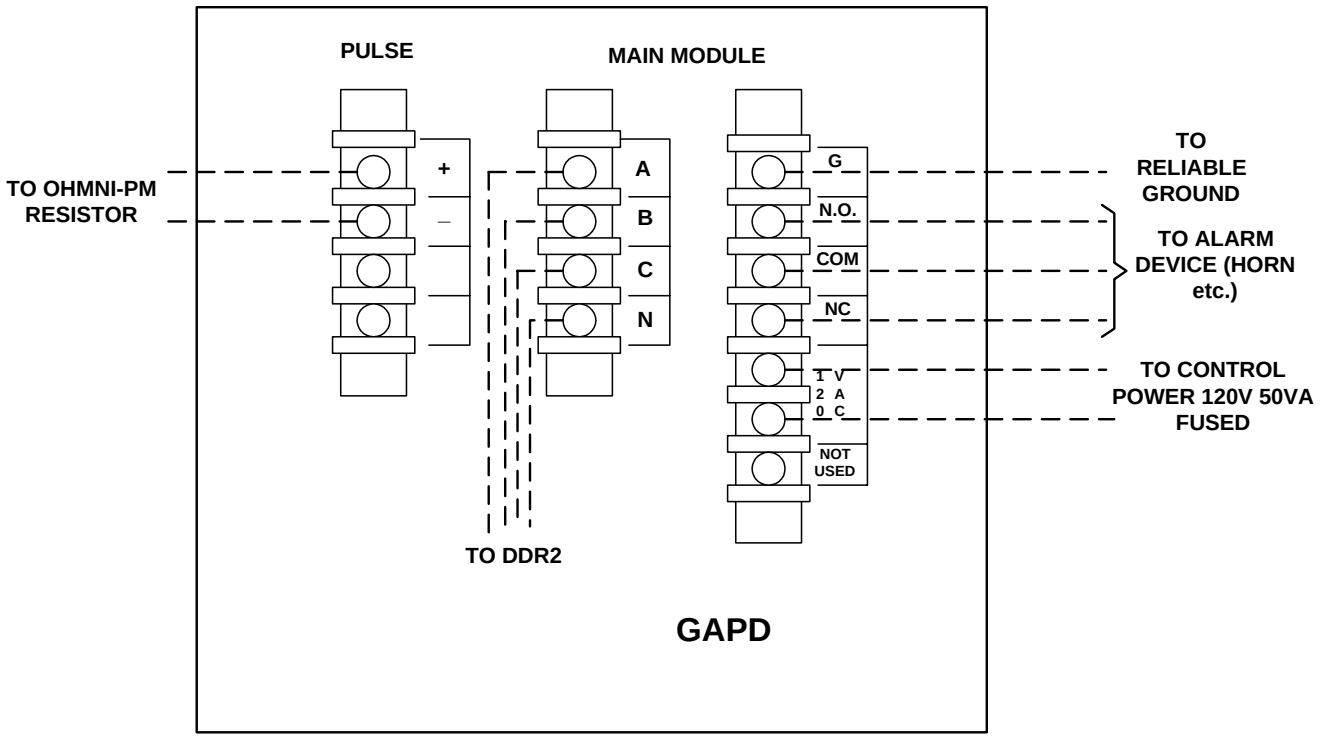

Figure 3 Connection Diagram for GAPD

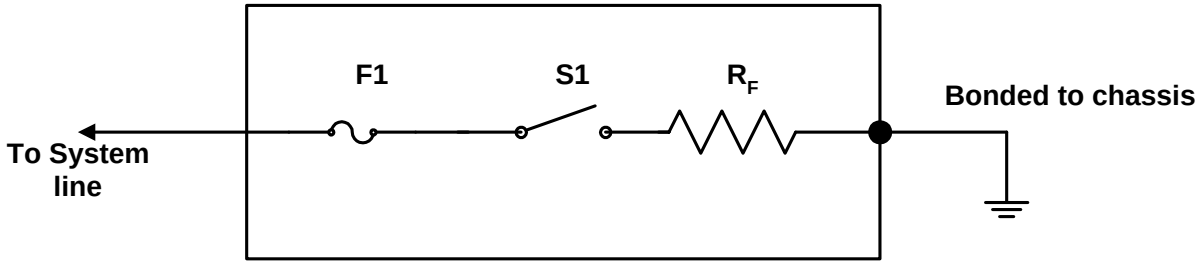

Figure 4 Typical Test Fault Resistor

ADDITIONAL INFORMATION

If you require more information or experience problems with your equipment that persist after taking the steps identified in this manual, contact I-GARD Customer Service at the number below.

The Power to Protect

I-GARD
7615 KIMBEL ST UNIT 1
MISSISSAUGA ON L5S 1A8
CANADA
Telephone: 905 673 1553
Fax: 905 673 8472
e-mail: sales@i-gard.com
Website: www.i-gard.com