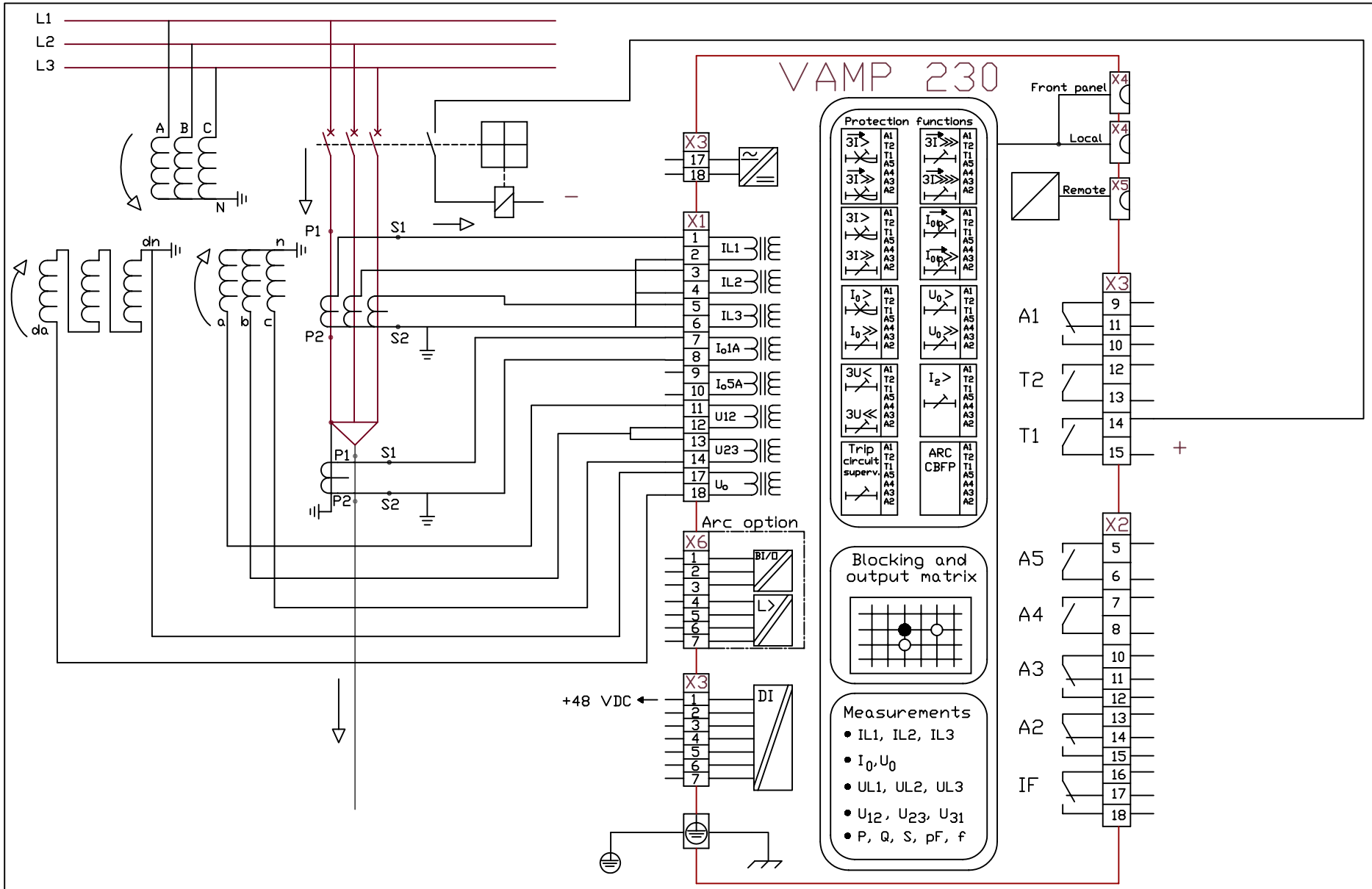

Mode: Line + Uo

Itemref	Quantity	Title/Name, designation, material, dimension etc	Article No./Reference

Designed by	Checked by	Approved by – date	Title/Name	Date	Scale
R.Vaahtera				2003.01.01	

VAMP Ltd
P.O.Box 5 (Runsorintie 7)
FIN–65381 VAASA
FINLAND
Phone +358–6–212 1100
Fax +358–6–212 1105
email vamp@vamp.fi

Title/Name		
VAMP 230 – 3 C 7 C A A		
Drawing number	Edition	Sheet
VD230.EN.001	A	1/4